SKILLING, HELLE, CHRISTIANSEN, ROBERTSON — Structural & Civil Engineers

PROJECT: THE WORLD TRADE CENTER | TITLE: CONSTRUCTION JOINT DETAIL | DATE: 12-3-68

REVISIONS

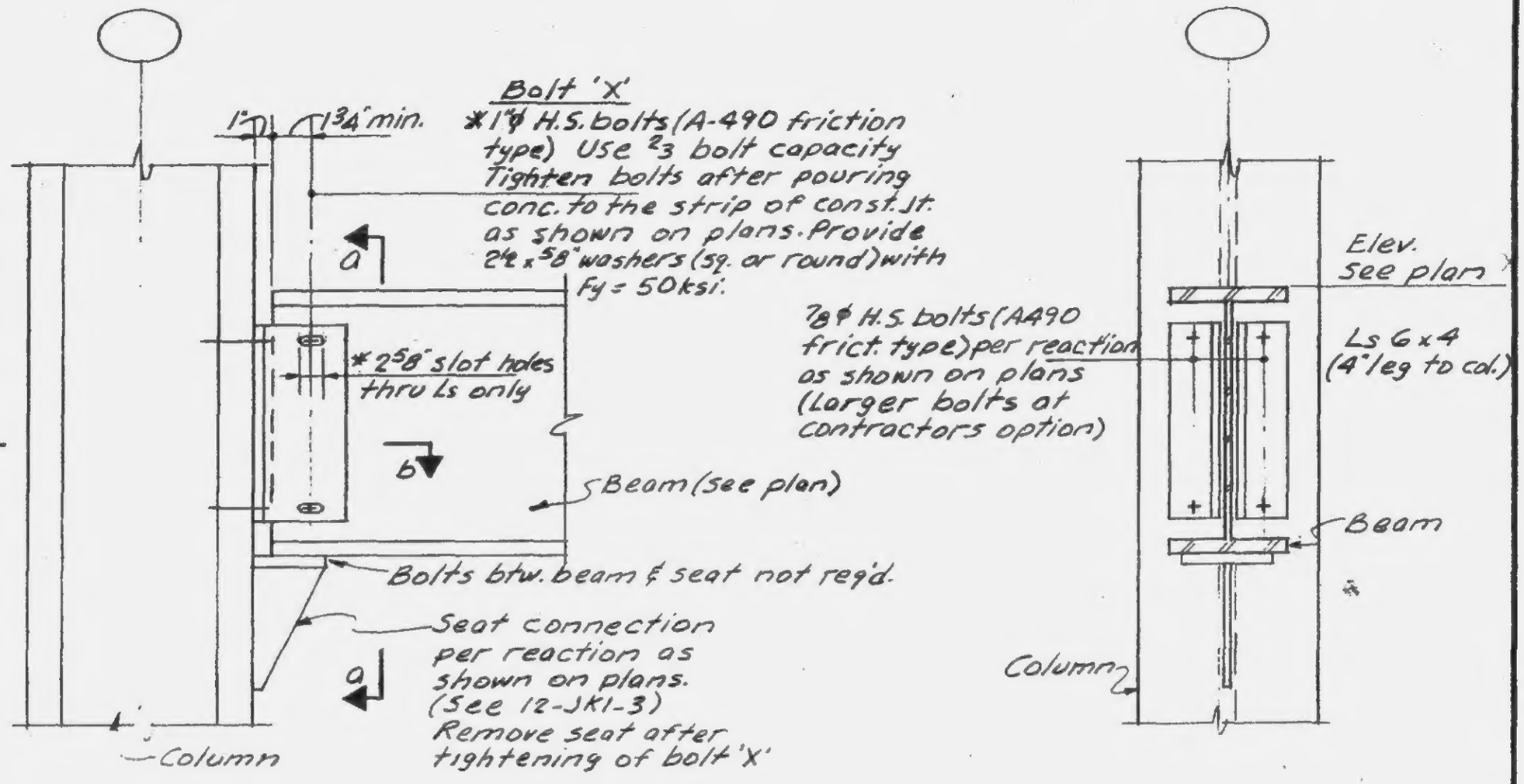

Note:

1. *—For cols. J7-3 thru 5 use 1 1/8" ϕ bolts with 2 3/4" slot holes.

LICENSED PROFESSIONAL ENGINEER — LESLIE E. ROBERTSON — No. 34360 — UNIVERSITY OF THE STATE OF NEW YORK

DESIGNED

DRAWN

REVIEWED

12-JK3-2

SKILLING, HELLE, CHRISTIANSEN, ROBERTSON — Structural & Civil Engineers

PROJECT THE WORLD TRADE CENTER | TITLE CONSTRUCTION JOINT DETAIL | DATE 12-3-68

REVISIONS

1-3-69

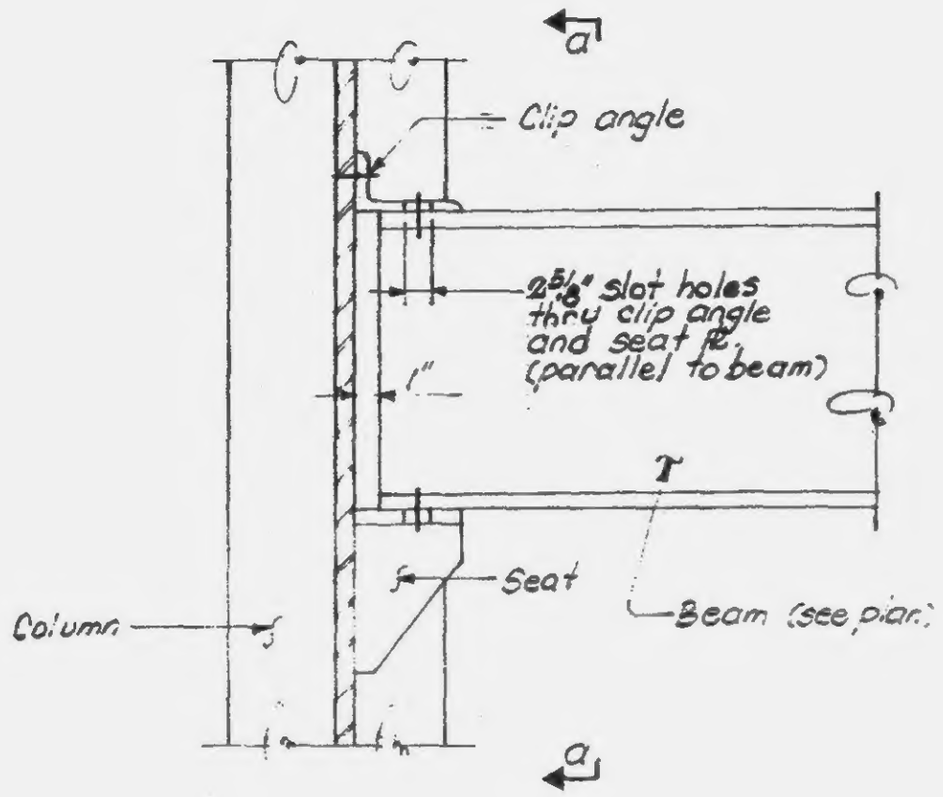

ELEVATION

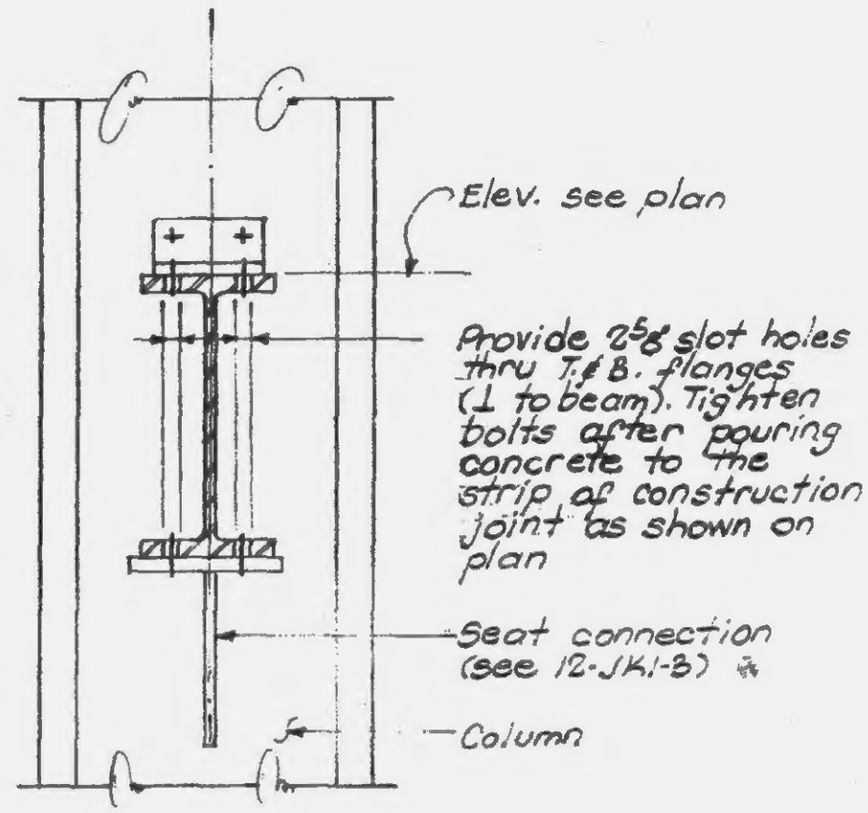

Section a-a

FOR BEAMS WITH FLANGLES LARGER THAN 10"

(For beam flanges less than 10", see 12-JK3-4)

Notes:

1. Provide washers 2½ x 5/8 (square or round) with Fy=50 ksi for all bolts over slot holes
2. Where seat interferes with bosom ∠s, these ∠s may be eliminated.

LICENSED PROFESSIONAL ENGINEER — LESLIE E. ROBERTSON — No. 34360 — UNIVERSITY OF THE STATE OF NEW YORK

DESIGNED

DRAWN S.C.

REVIEWED E.L.

12-JK3-3

SKILLING, HELLE, CHRISTIANSEN, ROBERTSON — Structural & Civil Engineers

PROJECT THE WORLD TRADE CENTER | TITLE CONSTRUCTION JOINT DETAIL | DATE 12-3-68

REVISIONS

1-3-69

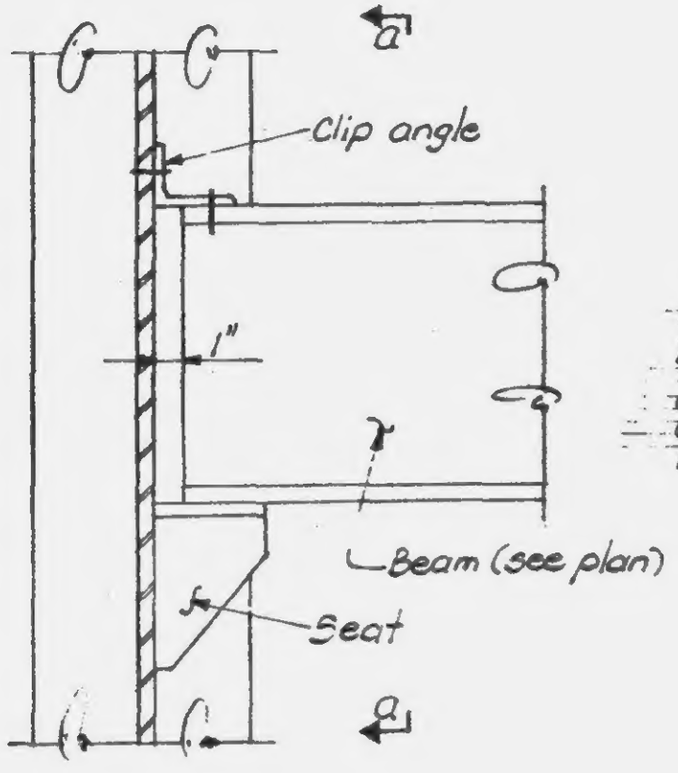

ELEVATION

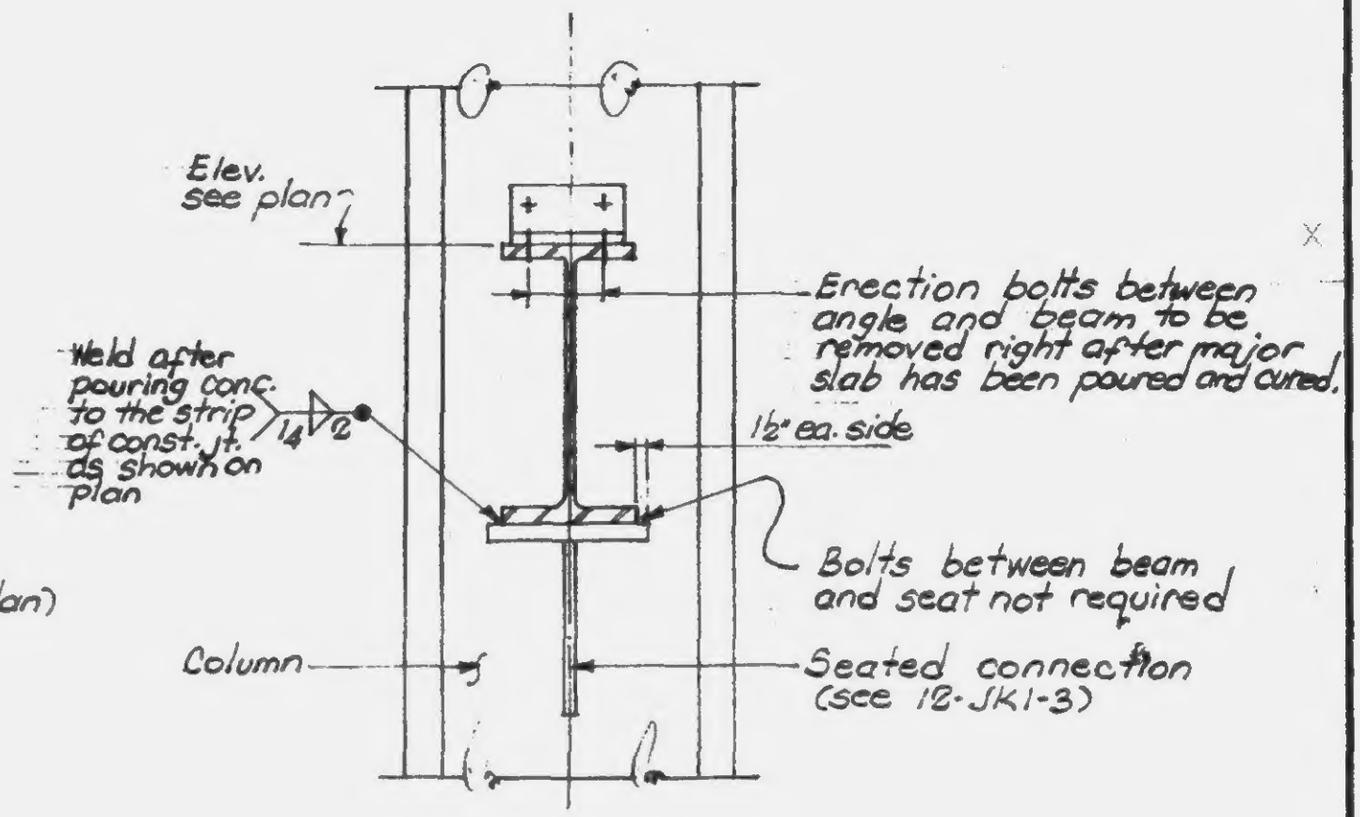

Section a-a

FOR BEAMS WITH FLANGES LESS THAN 10"

(For beam flanges greater than 10", see 12-JK3-3)

Note:

1. Where seat interferes with bosom Rs, these Rs may be eliminated.

LICENSED PROFESSIONAL ENGINEER — LESLIE E. ROBERTSON — No. 34360 — UNIVERSITY OF THE STATE OF NEW YORK

DESIGNED

DRAWN S.C.

REVIEWED E.L.

12-JK3-4

SKILLING, HELLE, CHRISTIANSEN, ROBERTSON — Structural & Civil Engineers

PROJECT: THE WORLD TRADE CENTER | TITLE: CONSTRUCTION JOINT DETAIL | DATE: 12-3-68

REVISIONS
1-3-69

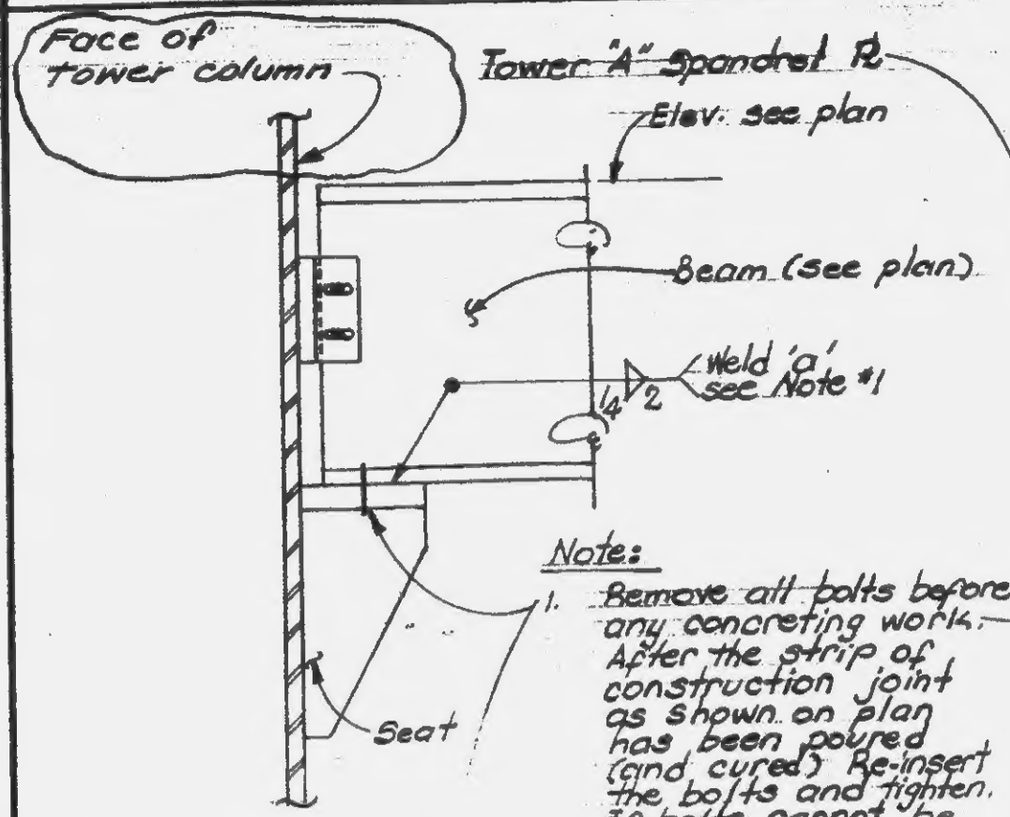

TYPE A

Note:

1. Remove all bolts before any concreting work. After the strip of construction joint as shown on plan has been poured (and cured) Re-insert the bolts and tighten. If bolts cannot be inserted into the holes due to temperature changes, use weld 'a'

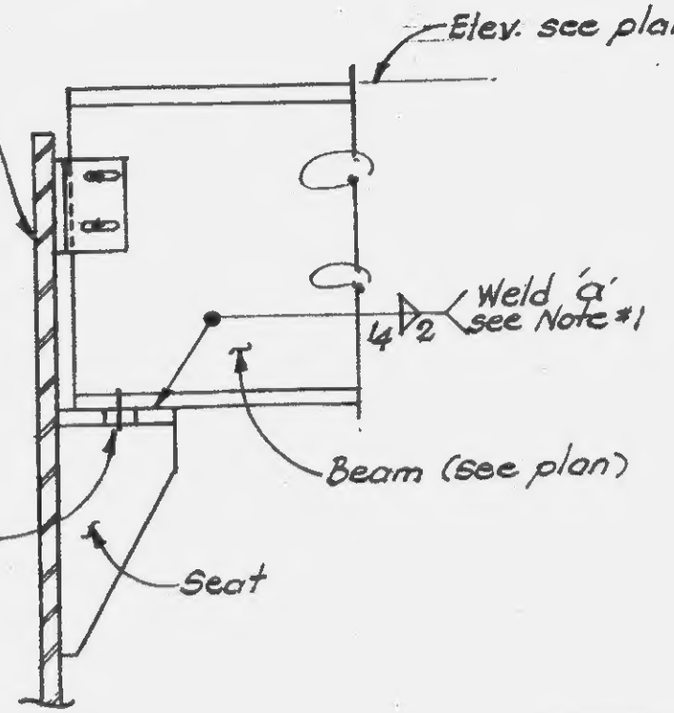

TYPE C

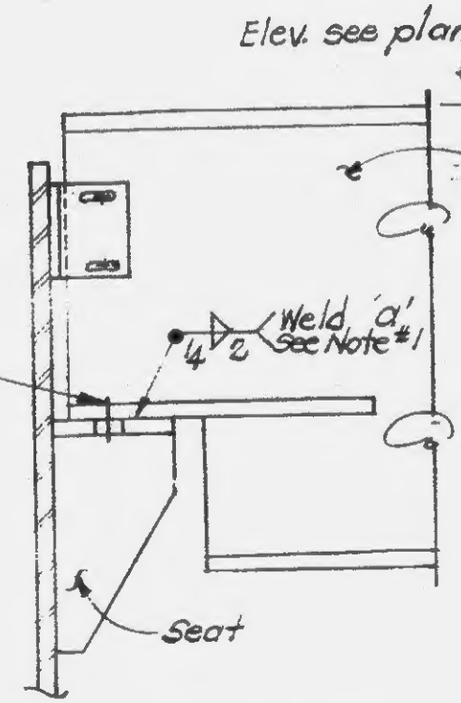

TYPE B

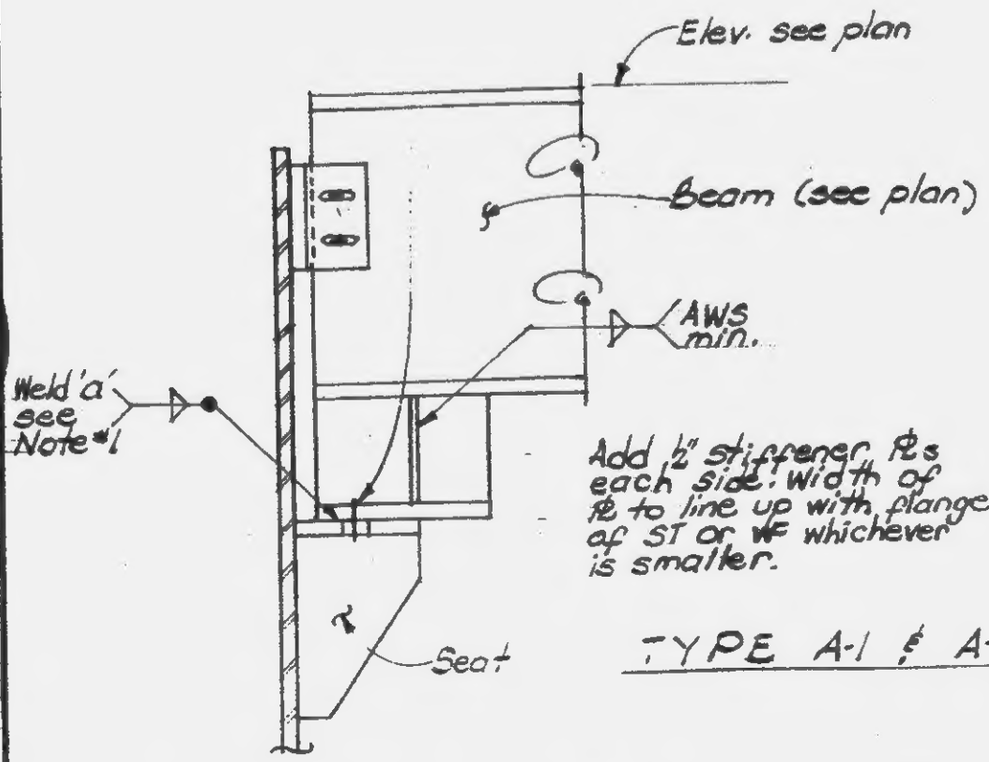

Add 1/2" stiffener PL's each side. Width of PL to line up with flange of ST or WF whichever is smaller.

TYPE A-1 & A-2

Notes:

2. Detail of seat connections same as shown on 12-JK1-105 and 106, except added stiffener PL's in Type A-1 & A-2.

LICENSED PROFESSIONAL ENGINEER — LESLIE E. ROBERTSON — No. 34360 — STATE OF NEW YORK

DESIGNED

DRAWN
S.C.

REVIEWED
E.L.

12-JK3-5

SKILLING, HELLE, CHRISTIANSEN, ROBERTSON — Structural & Civil Engineers

PROJECT: THE WORLD TRADE CENTER | TITLE: CONSTRUCTION JOINT DETAIL | DATE: 12-3-68

REVISIONS

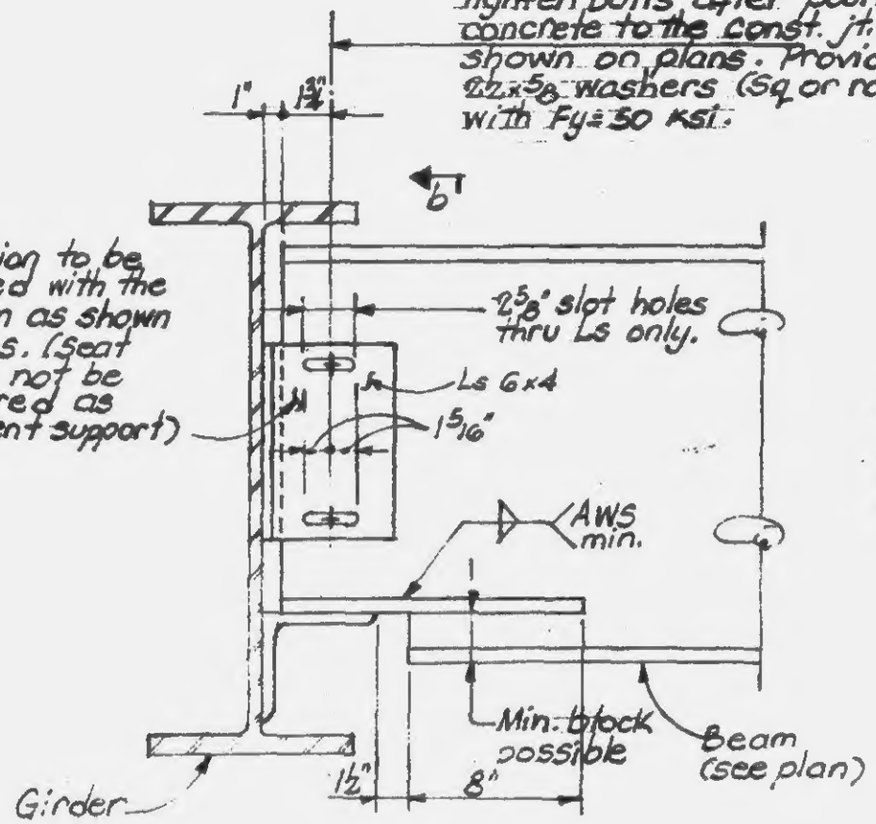

Section a-a

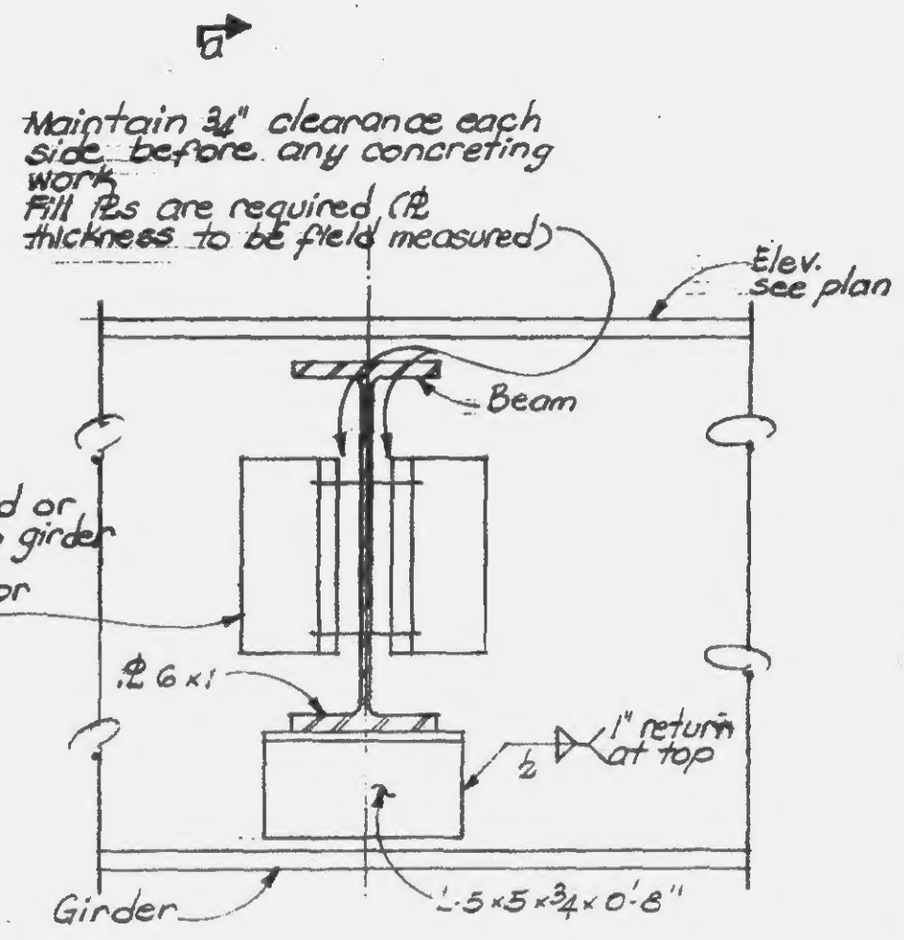

Section b-b

LICENSED PROFESSIONAL ENGINEER
LESLIE E. ROBERTSON
No. 34360
UNIVERSITY OF THE STATE OF NEW YORK

DESIGNED

DRAWN

REVIEWED

12-JK3-6

SKILLING, HELLE, CHRISTIANSEN, ROBERTSON — Structural & Civil Engineers

PROJECT: THE WORLD TRADE CENTER | TITLE: CONSTRUCTION JOINT DETAIL | DATE: 12-3-68

REVISIONS
1-3-69

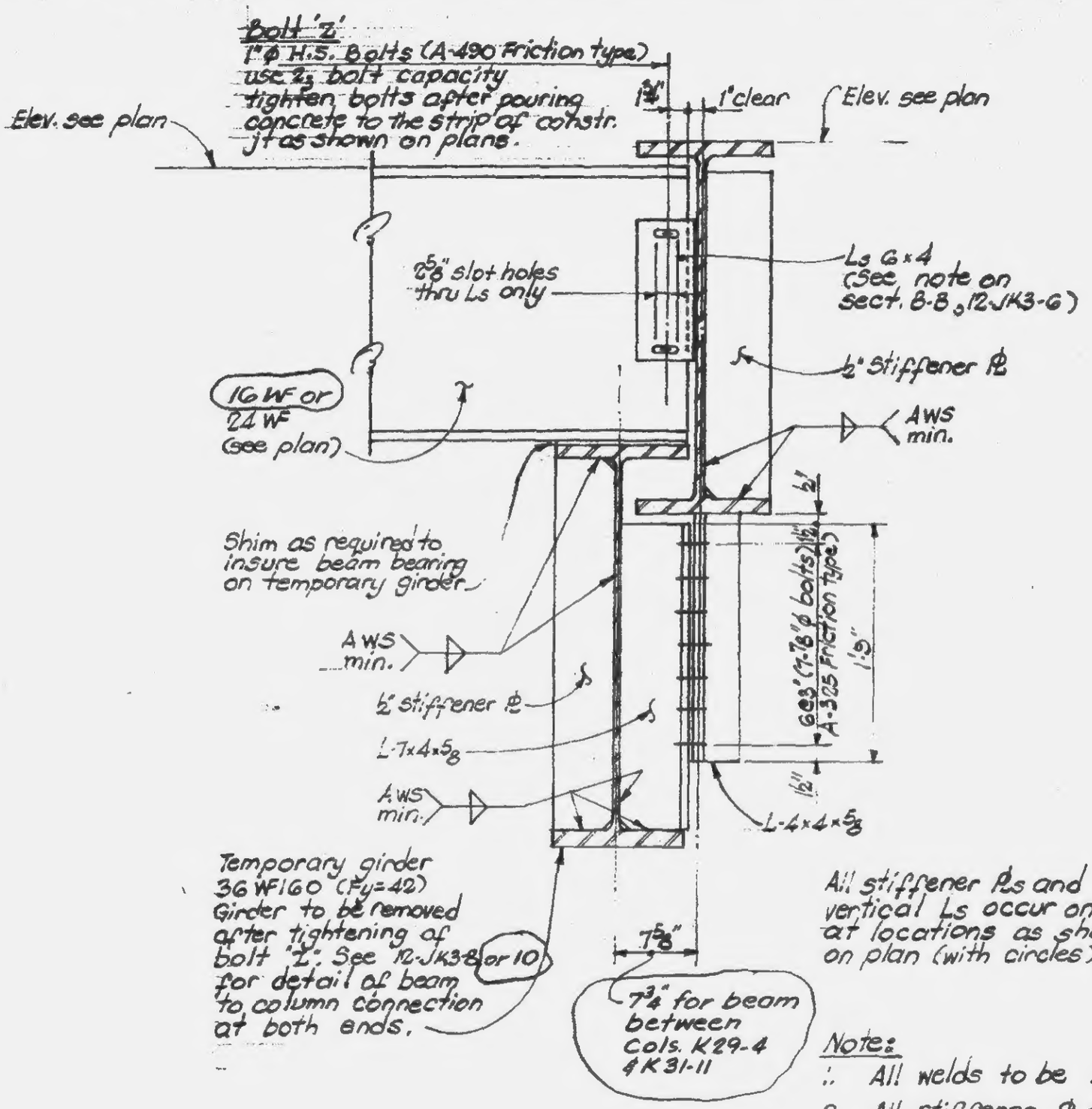

All stiffener PLs and vertical Ls occur only at locations as shown on plan (with circles)

Note:
1. All welds to be E70XX
2. All stiffener PLs & vertical Ls to have Fy=36 ksi.

LICENSED PROFESSIONAL ENGINEER — LESLIE E. ROBERTSON — No. 34360 — UNIVERSITY OF THE STATE OF NEW YORK

DESIGNED
DRAWN S.C.
REVIEWED E.L.

12-JK3-7

SKILLING, HELLE, CHRISTIANSEN, ROBERTSON — Structural & Civil Engineers

PROJECT THE WORLD TRADE CENTER

TITLE CONSTRUCTION JOINT DETAIL

DATE 12-3-68

REVISIONS

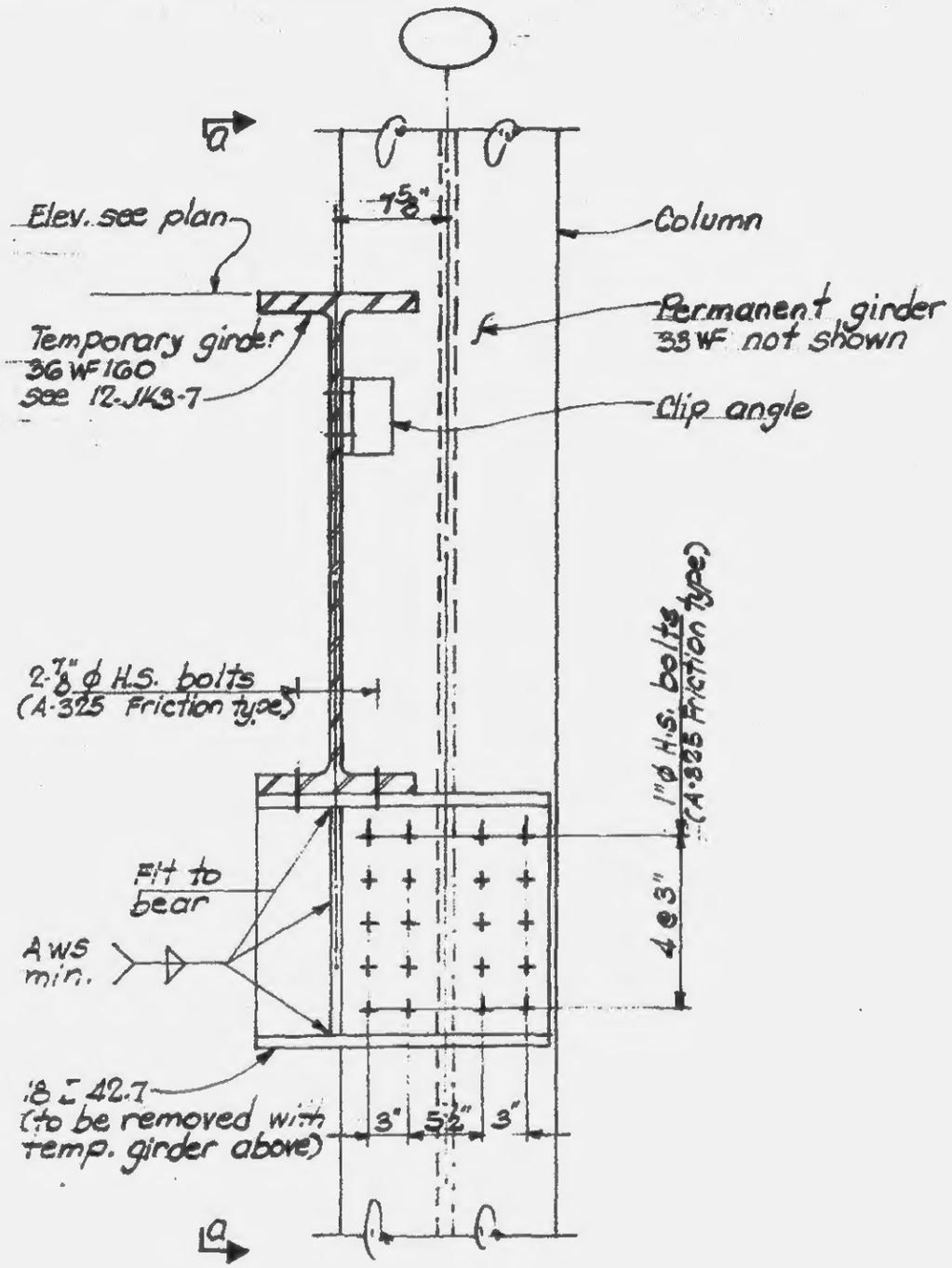

ELEVATION

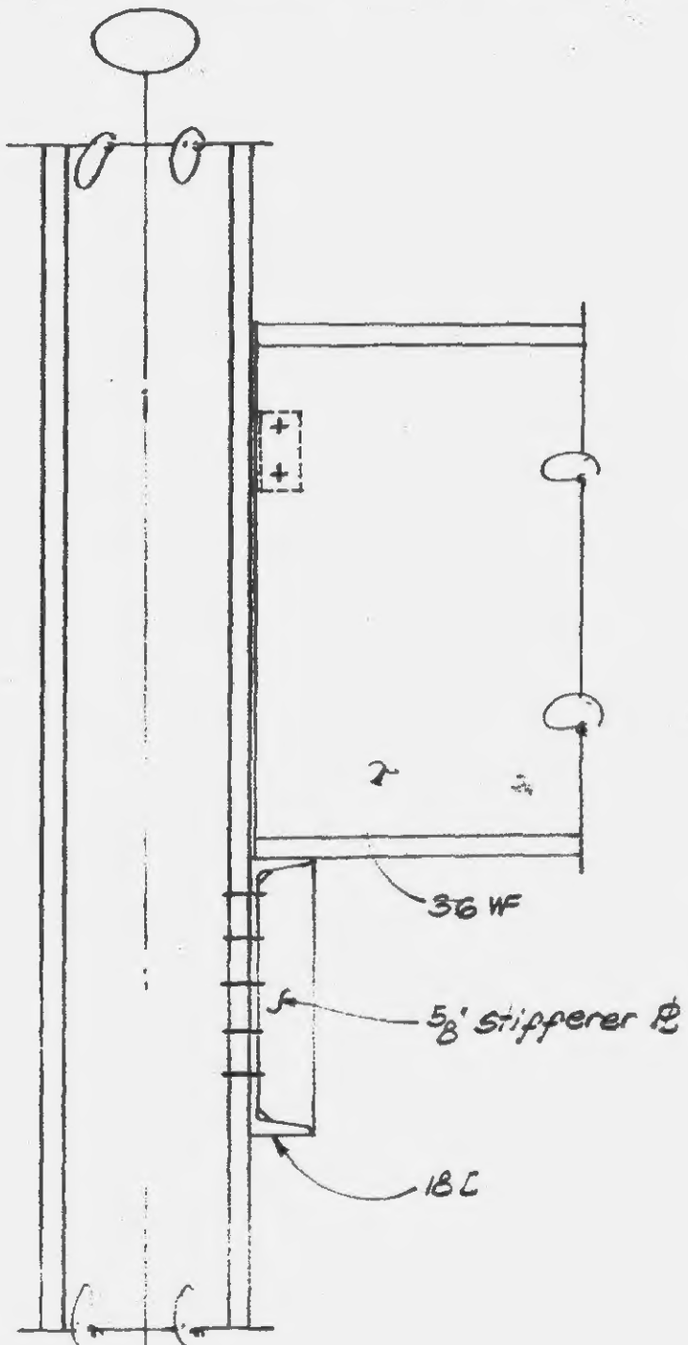

Section a-a

DESIGNED

DRAWN

REVIEWED

12-JK3-8

SKILLING, HELLE, CHRISTIANSEN, ROBERTSON

PROJECT THE WORLD TRADE CENTER | TITLE CONSTRUCTION JOINT DETAILS | DATE 1-9-68

REVISIONS

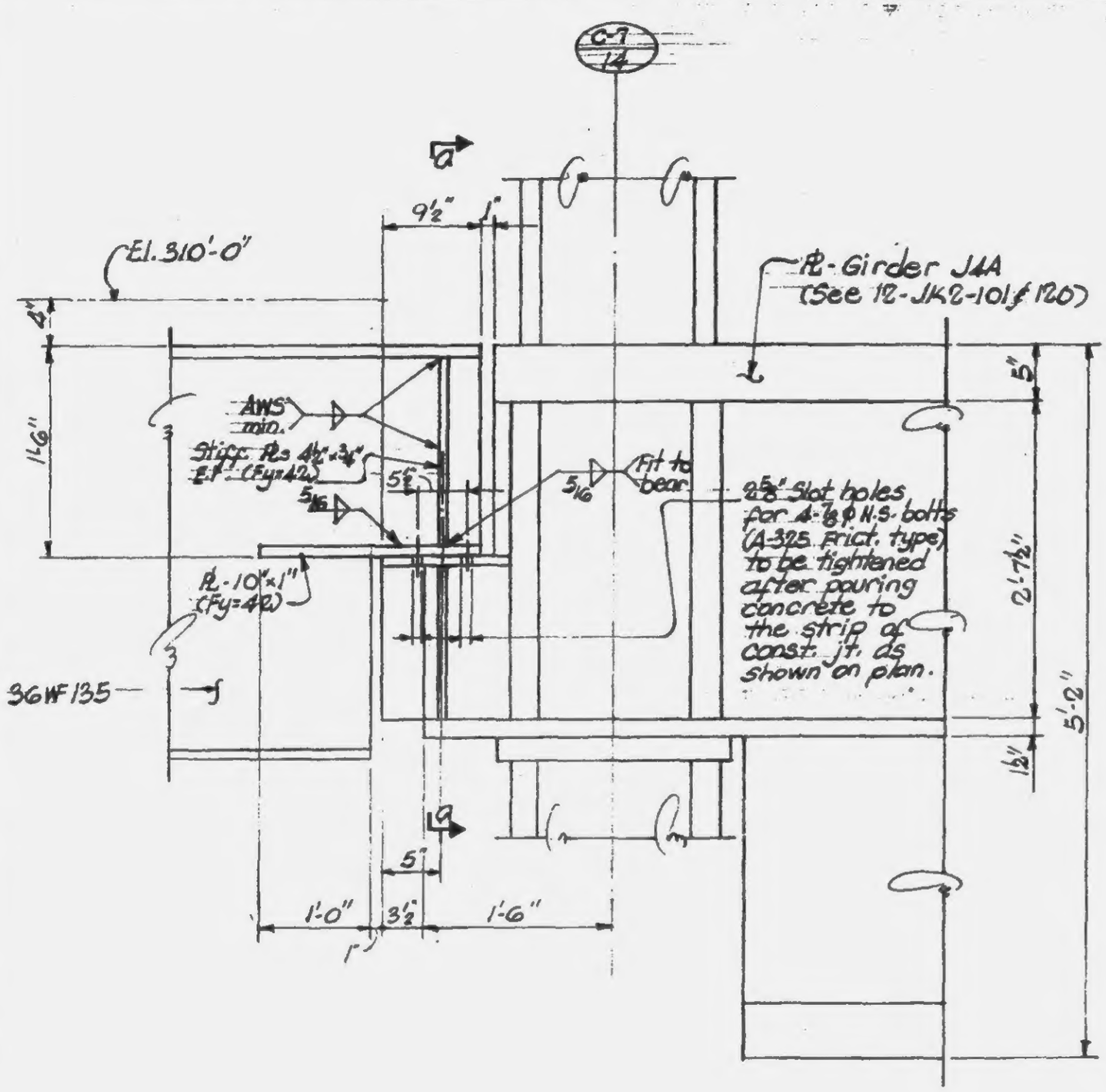

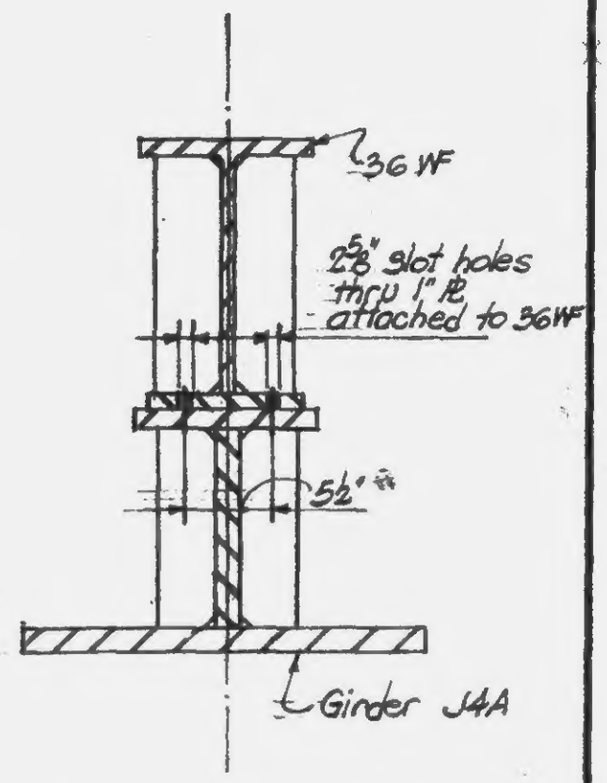

Section a-a

NOTES:

1. Provide washers 2½x⅝ (square or round) with Fy=50 KSI for all bolts over slot holes.

LICENSED PROFESSIONAL ENGINEER
LESLIE E. ROBERTSON
No. 34360
UNIVERSITY OF THE STATE OF NEW YORK

DESIGNED

DRAWN
S.T.M.

REVIEWED
E.L.

12-JK3-9

CHRISTIANSEN, ROBERTSON — Structural & Civil Engineers

WORLD TRADE CENTER

TITLE: CONSTRUCTION JOINT DETAIL

DATE: 1-3-69

REVISIONS

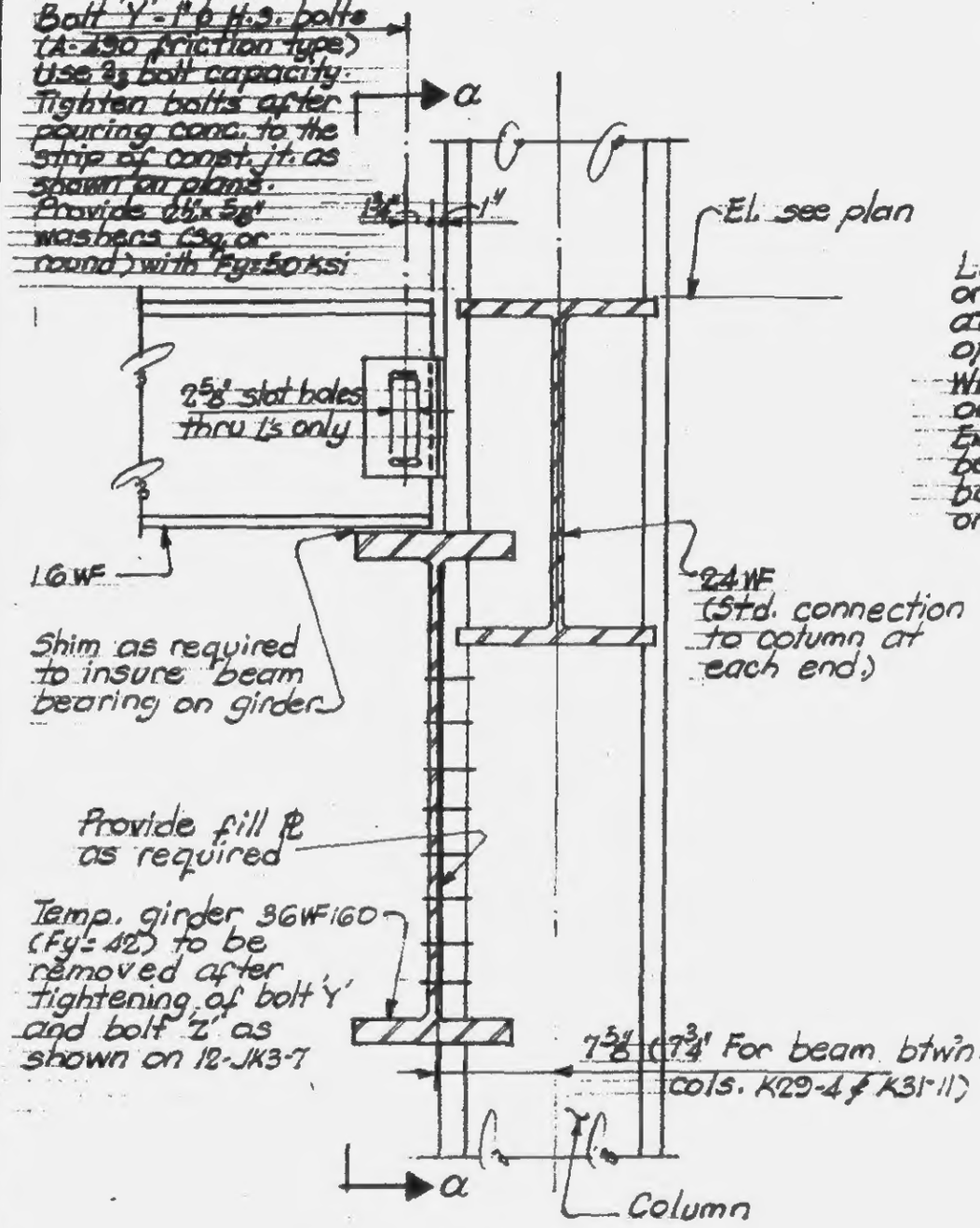

ELEVATION

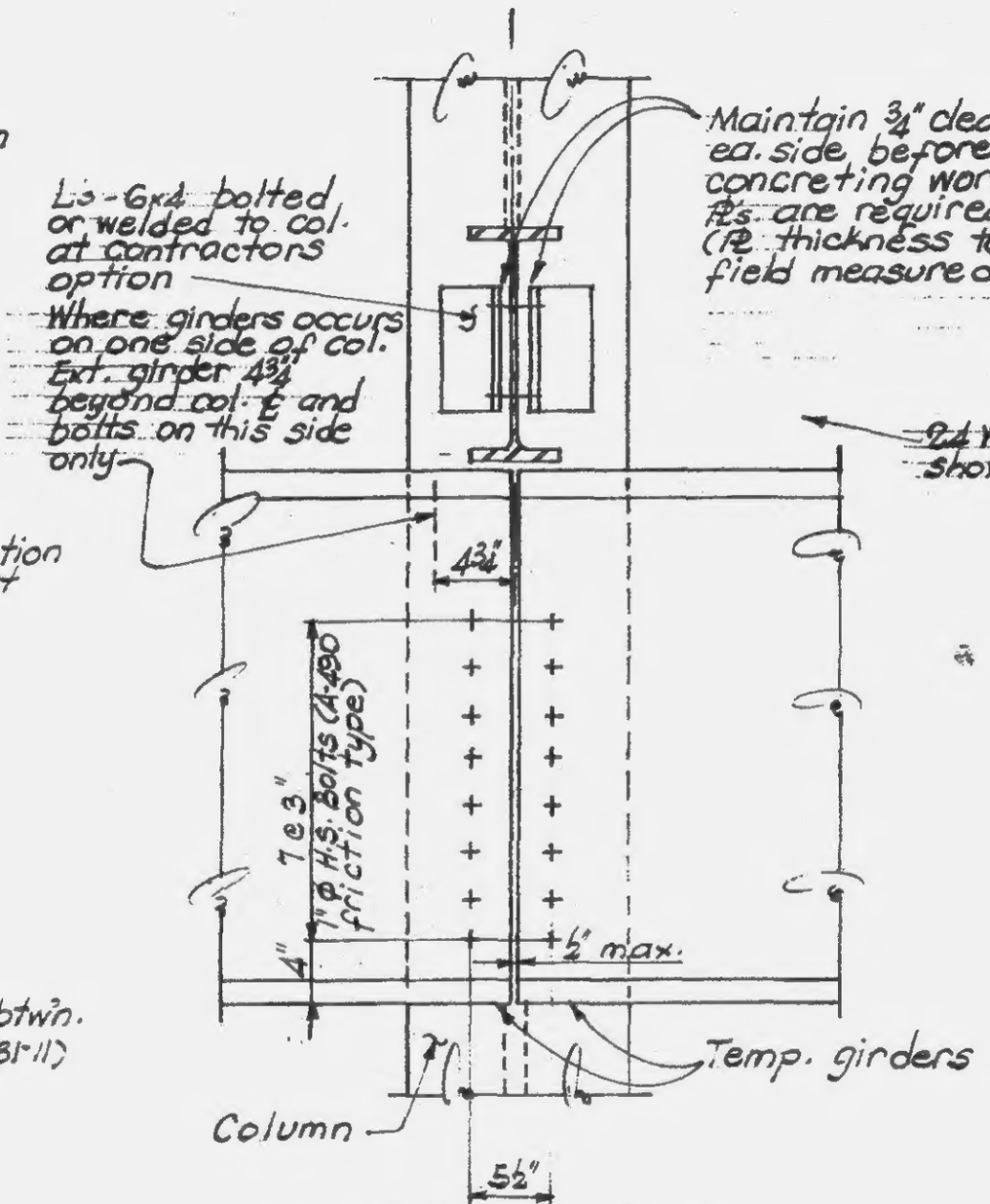

Section a-a

NOTES:
1. All welds to be E70xx.

LICENSED PROFESSIONAL ENGINEER — LESLIE E. ROBERTSON — No. 34360 — UNIVERSITY OF THE STATE OF NEW YORK

DESIGNED

DRAWN: S.T.M.

REVIEWED: E.L.

12-JK3-10

SKILLING HELLE CHRISTIANSEN ROBERTSON — Consulting Structural Engineers

PROJECT THE WORLD TRADE CENTER | TITLE CONSTRUCTION JOINT DETAIL | DATE 1-3-69

REVISIONS

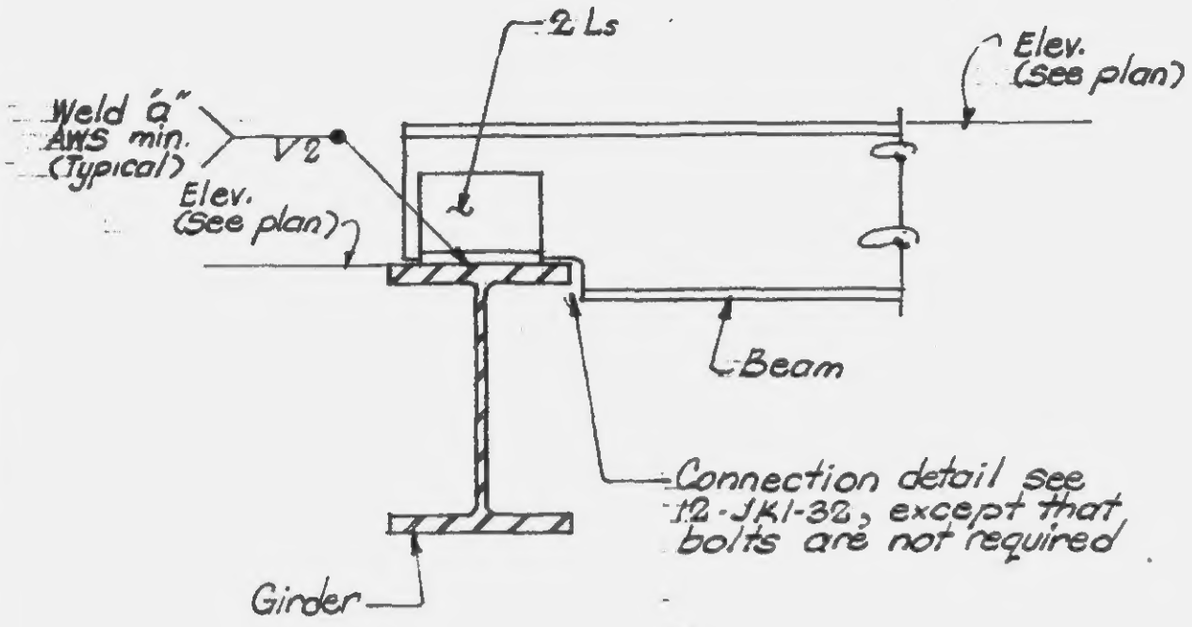

NOTES:

1. Weld "a" to be carried out after pouring concrete to the construction joint.

LICENSED PROFESSIONAL ENGINEER — LESLIE E. ROBERTSON — No. 34360 — UNIVERSITY OF THE STATE OF NEW YORK

DESIGNED

DRAWN S.T.M.

REVIEWED E.L.

12-JK3-11

FISKILLING, HELLE, CHRISTIANSEN & ROBERTSON — Structural Engineers
PROJECT: THE WORLD TRADE CENTER | TITLE: CONSTRUCTION JOINT DETAIL | DATE: [illegible]

REVISIONS

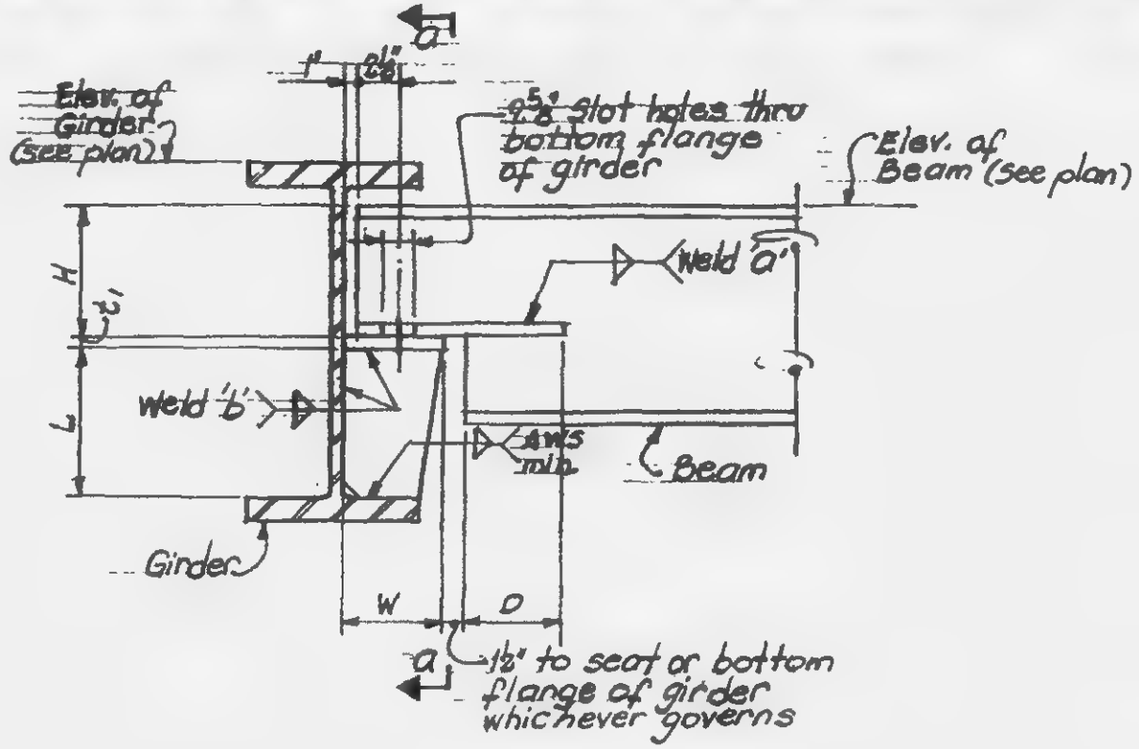

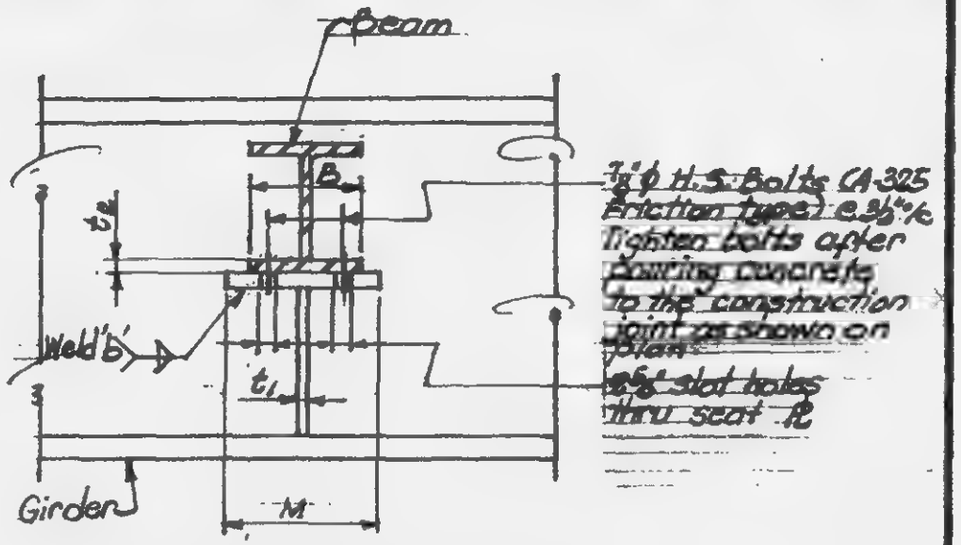

Section a-a

NOTES:
1. All material to be Fy=42 ksi
2. All welds to be E70XX.
3. Provide washers 2½"×⅝" (round or square) with Fy=50 for all bolts over slot holes.

DETAIL No.	GIRDER		BEAM							SEAT				
	SIZE	ELEV.	SIZE	ELEV.	H	B	t_2	D	WELD 'a'	W	L	M	t_1	WELD 'b'
1	24WF110	309'-1"	16WF78	309'-1"	1'-2¼"	6"	1"	6"	5/16"	5"	9"	8"	1"	7/16"
2	36WF135	309'-1"	16WF71	309'-1"	NO BLOCKING					6"	17 9/16"	8"	1"	5/16"
3	36W135	309'-1"	16WF36	309'-1"	NO BLOCKING					6"	17 13/16"	8"	1"	5/16"
4	33WF141	289'-0½"	24WF68	289'-5"	1'-9 13/16"	8"	1"	8"	5/16"	5"	14"	8"	1"	5/16"
5	33WF141	289'-0½"	24WF84	289'-5"	1'-8 13/16"	8"	1"	9"	5/16"	5"	15"	8"	1"	5/16"
6	J4M	289'-3"	16B31	289'-1"	NO BLOCKING					6"	29⅝"	8"	1"	5/16"
7	30WF172	289'-5"	16B31	289'-5"	NO BLOCKING					6"	12 15/16"	8"	1"	5/16"
8	33WF240	288'-6"	30WF108	289'-3"	NO BLOCKING					5"	11¼"	8"	1"	½"
9	33WF240	288'-6"	21WF73	288'-5"	1'-4⅞"	8"	1"	8"	5/16"	5"	13"	8"	1"	5/16"

LICENSED PROFESSIONAL ENGINEER
LESLIE E. ROBERTSON
No. 34360
UNIVERSITY OF THE STATE OF NEW YORK

DESIGNED

DRAWN S.T.M.

REVIEWED E.L.

12-JK3-12

SKILLING, HELLE, CHRISTIANSEN, ROBERTSON — Structural & Civil Engineers

PROJECT: THE WORLD TRADE CENTER | TITLE: CONSTRUCTION JOINT DETAILS | DATE: 1-3-69

REVISIONS

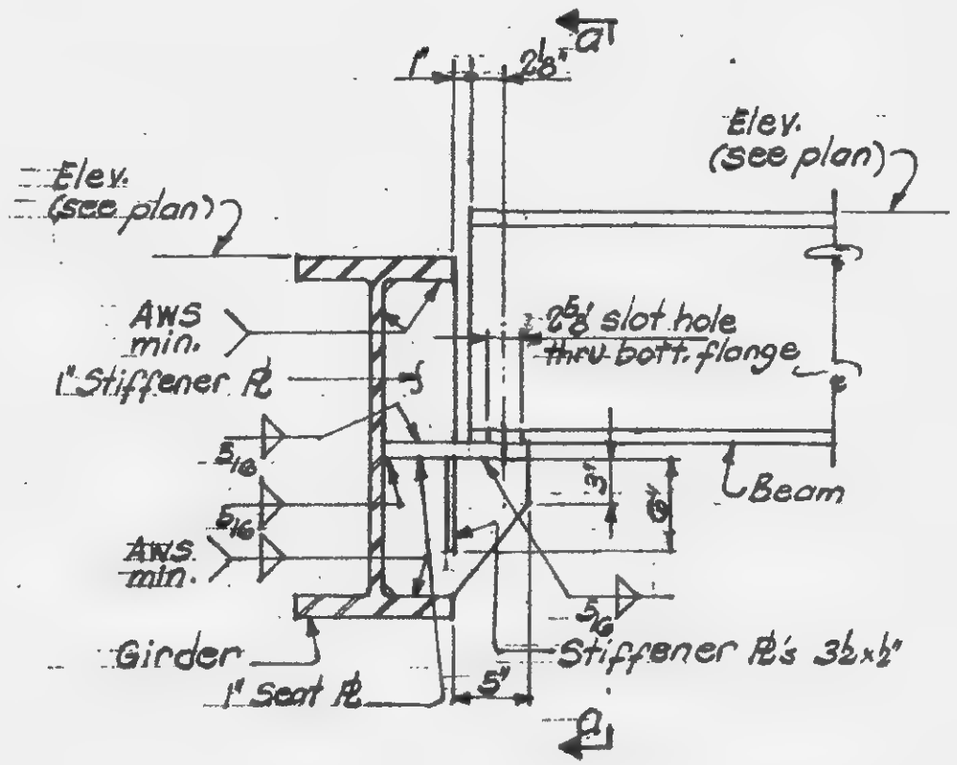

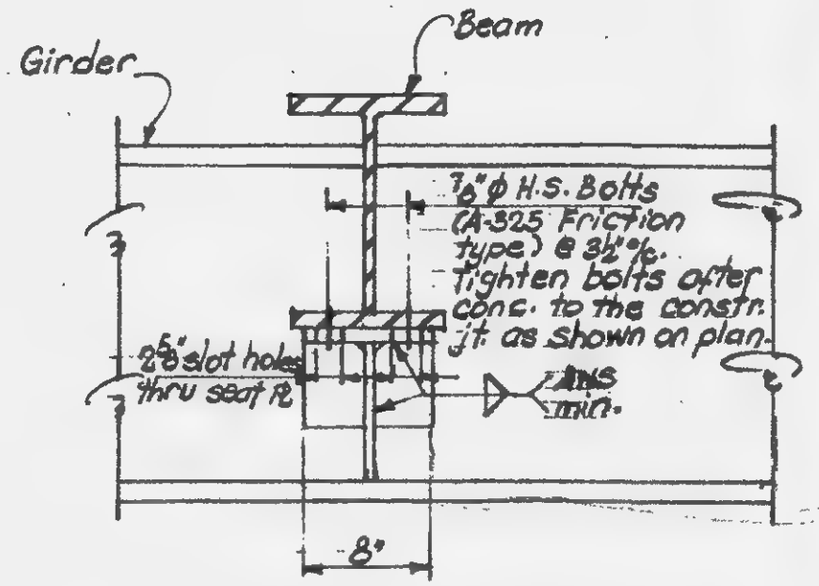

Section a

DETAIL A

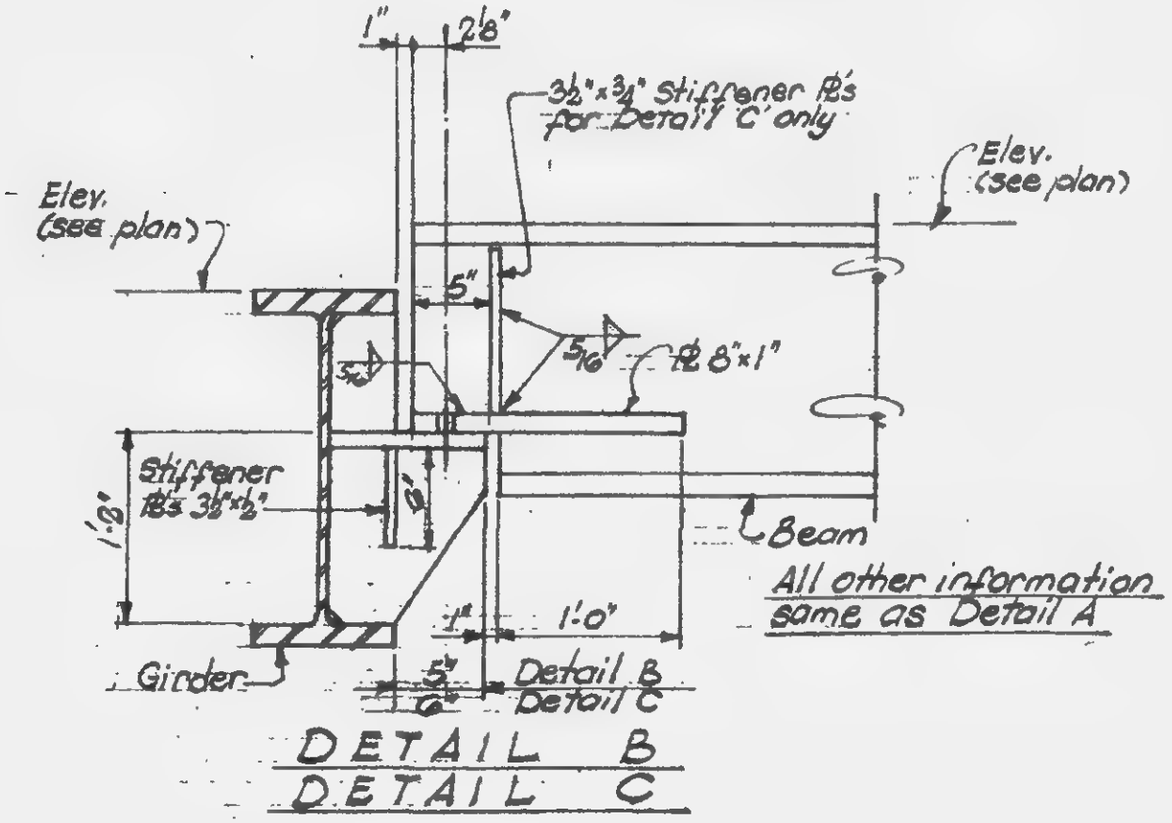

DETAIL B
DETAIL C

LICENSED PROFESSIONAL ENGINEER JULIE C. ROBERTSON No. 34360 STATE OF NEW YORK

12-JK3-13

SKIDMORE OWINGS & MERRILL

PROJECT THE WORLD TRADE CENTER — TITLE ESCALATOR SUPPORTING BEAMS AT PATH PLATFORMS (El. 250) — SCALE 1/2" = 1'-0"

REVISIONS

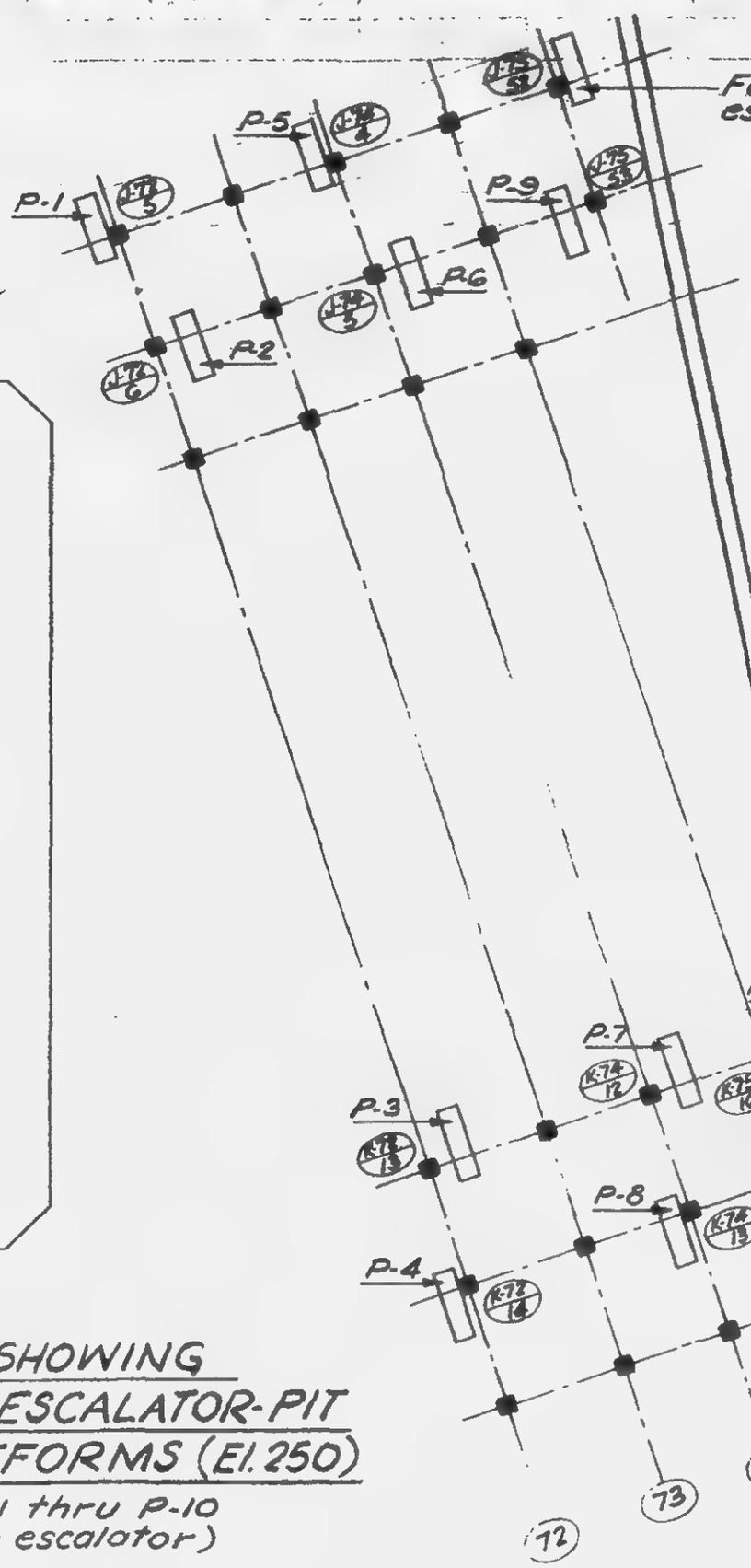

TOWER A

KEY PLAN SHOWING
LOCATION OF ESCALATOR-PIT
AT PATH PLATFORMS (El. 250)

(Escalators P-1 thru P-10
and one future escalator)

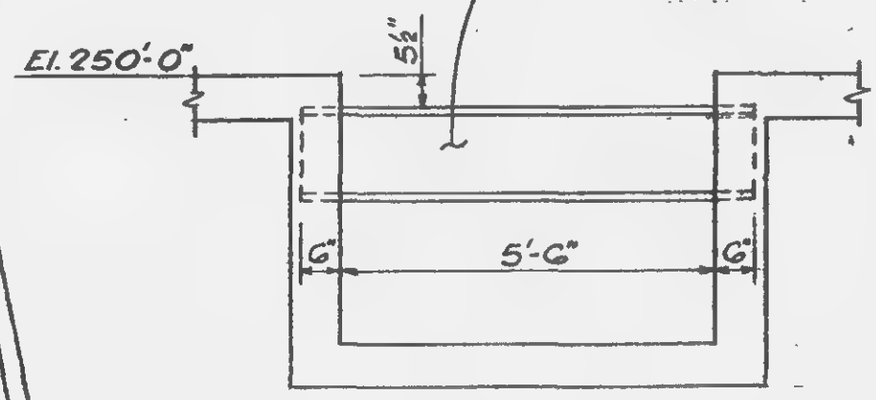

Section Thru Escalator Pit

(no scale)

NOTE:
See concrete dwgs SCJ-29 and SCK-33 for location of escalator pits & beams.

LICENSED PROFESSIONAL ENGINEER
LESLIE E. ROBERTSON
No. 34360
UNIVERSITY OF THE STATE OF NEW YORK

DESIGNED

DRAWN S.C.

REVIEWED E.L.

12-JK3-30

SKILLING, HELLE, CHRISTIANSEN, ROBERTSON — Structural & Civil Engineers

PROJECT THE WORLD TRADE CENTER | TITLE UTILITY SUPPORTS ALONG EAST PERIMETER WALL | DATE 12-17-68

REVISIONS

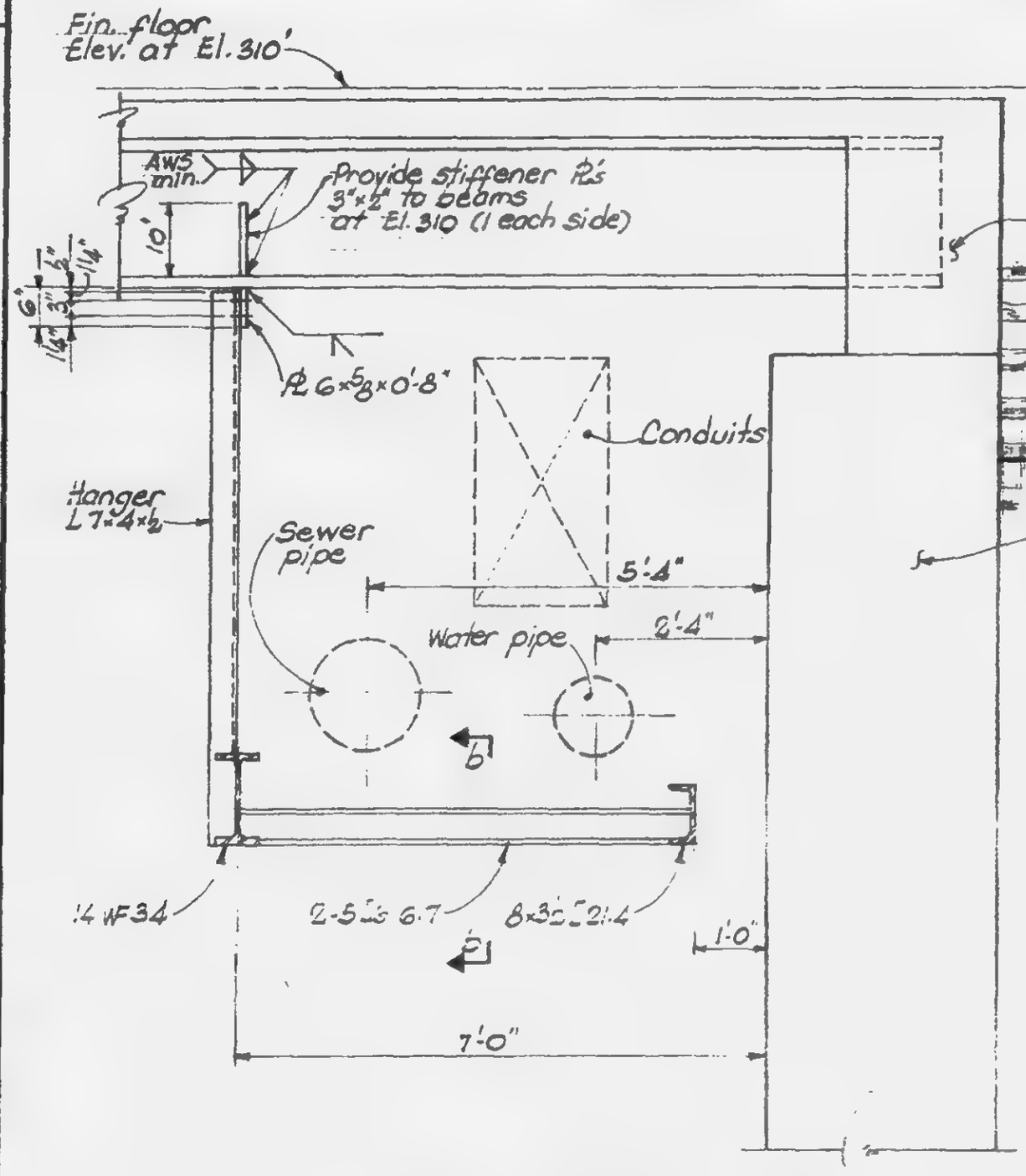

Section a-a
(½" = 1'-0")

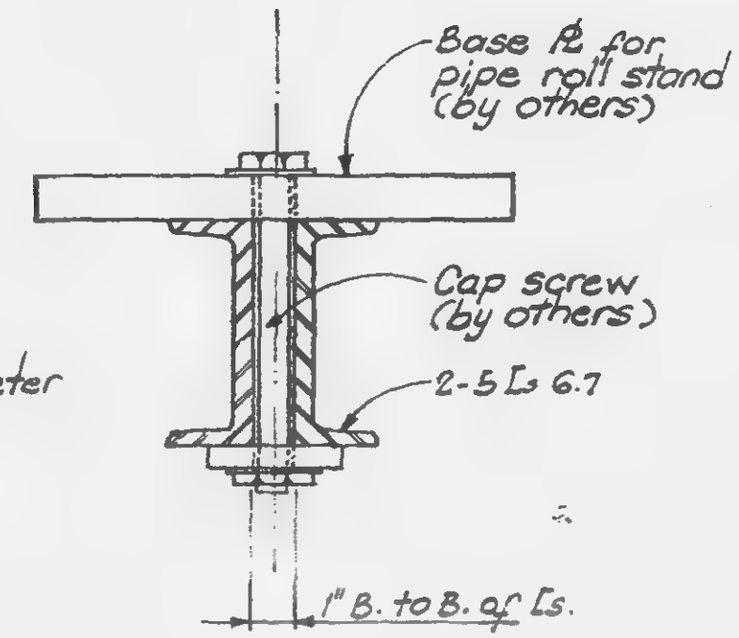

Section b-b
(3" = 1'-0")

NOTES:
1. All steel to be A-36.
2. See plan for elevation of beams.

LICENSED PROFESSIONAL ENGINEER
LESLIE E. ROBERTSON
No. 34360
UNIVERSITY OF THE STATE OF NEW YORK

DESIGNED

DRAWN

REVIEWED

12-JK3-50

SKILLING, HELLE, CHRISTIANSEN, ROBERTSON — Structural & Civil Engineers

PROJECT: THE WORLD TRADE CENTER | TITLE: UTILITY SUPPORTS ALONG EAST PERIMETER WALL | DATE: 12-17-68

REVISIONS

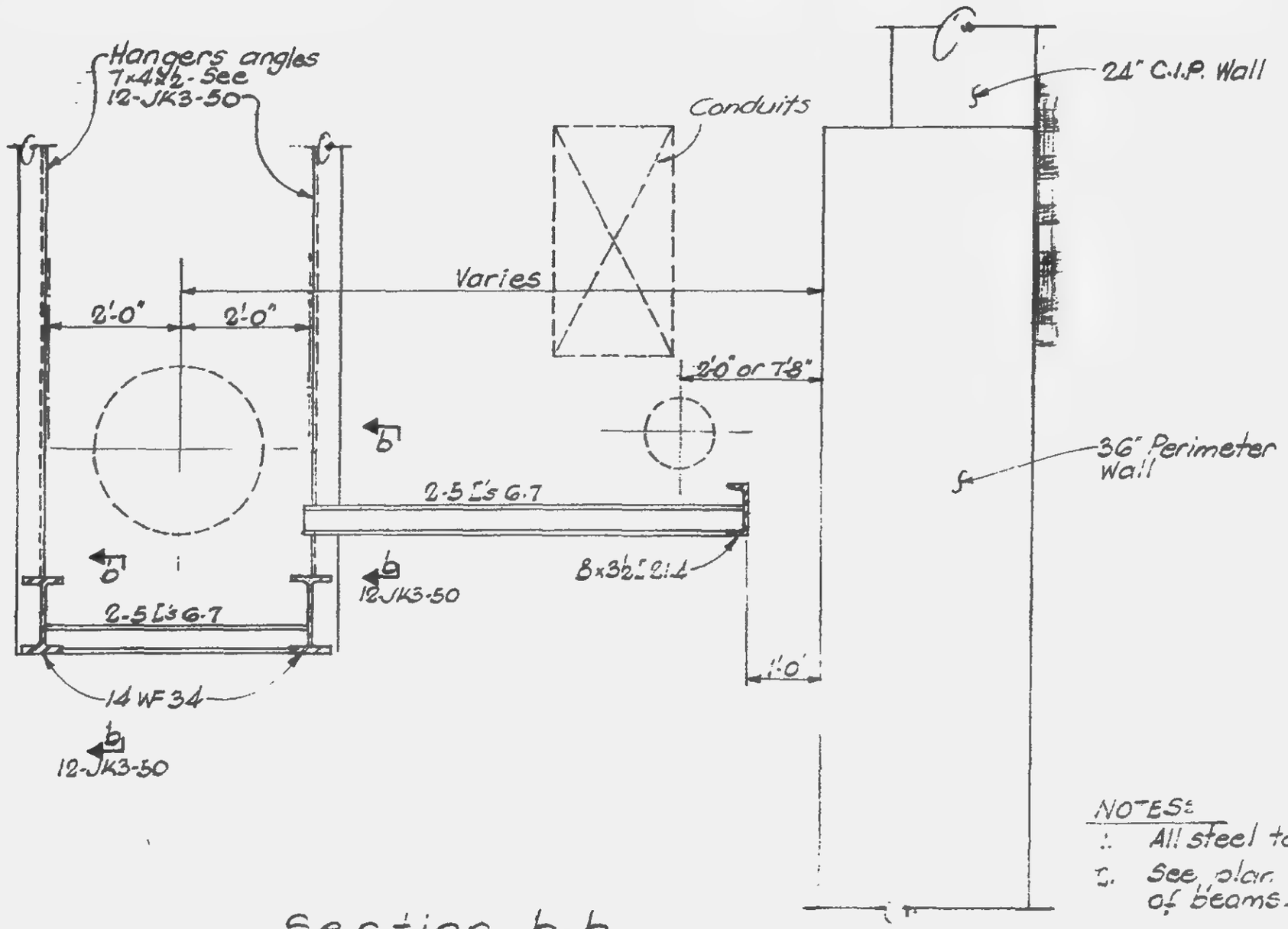

Section b-b
(½" = 1'-0")

NOTES:
1. All steel to be A-36.
2. See plan for elevation of beams.

LICENSED PROFESSIONAL ENGINEER — LESLIE E. ROBERTSON — No. 24360 — UNIVERSITY OF THE STATE OF NEW YORK

DESIGNED

DRAWN

REVISED

12-JK3-51

SKILLING, HELLE, CHRISTIANSEN, ROBERTSON — Structural & Civil Engineers

PROJECT: THE WORLD TRADE CENTER | TITLE: UTILITY SUPPORTS ALONG EAST PERIMETER WALL | DATE: 12-17-68

REVISIONS

4-18-69

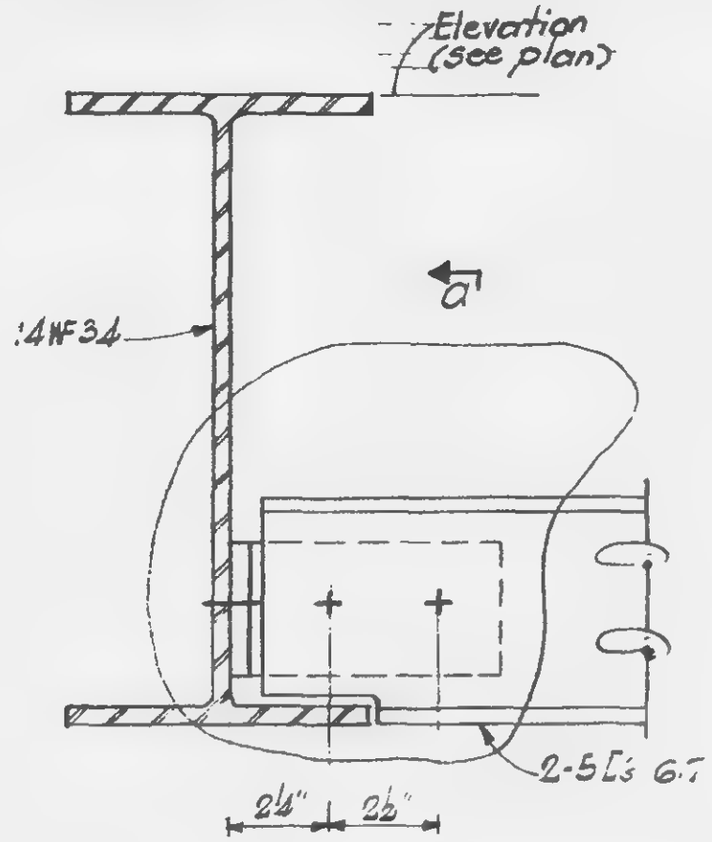

DETAIL – 1
DETAIL – 2

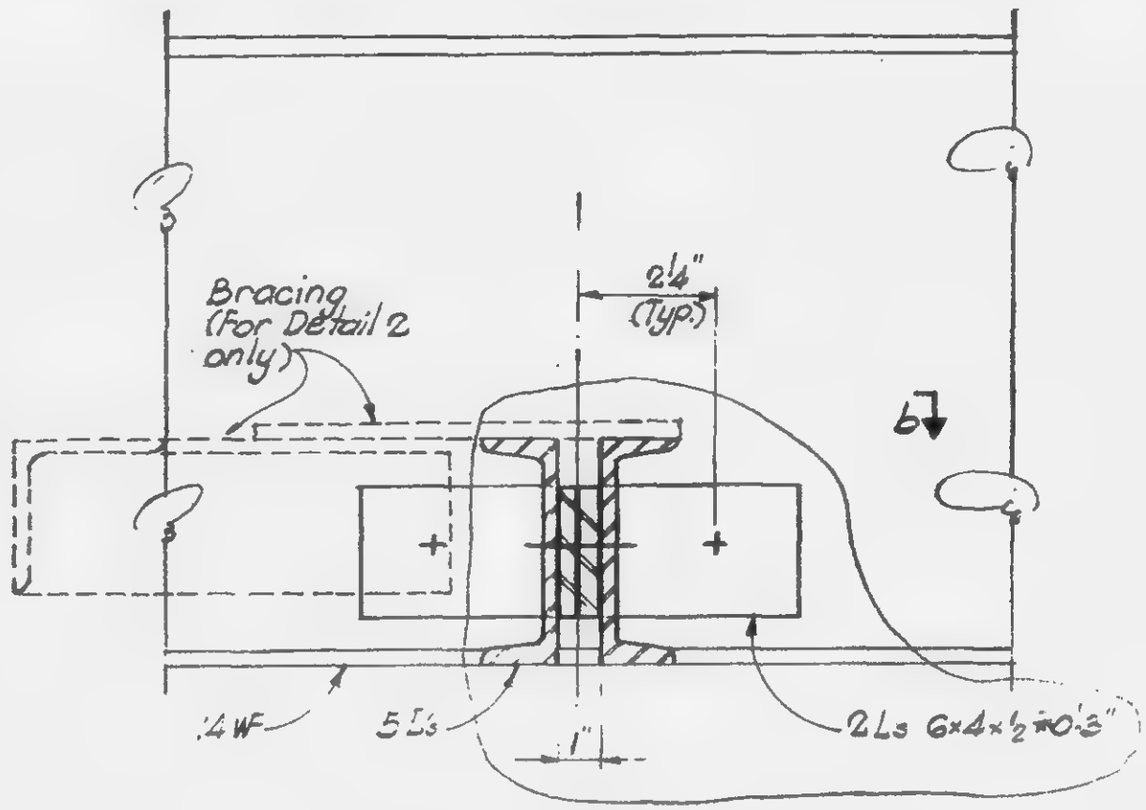

Section a-a

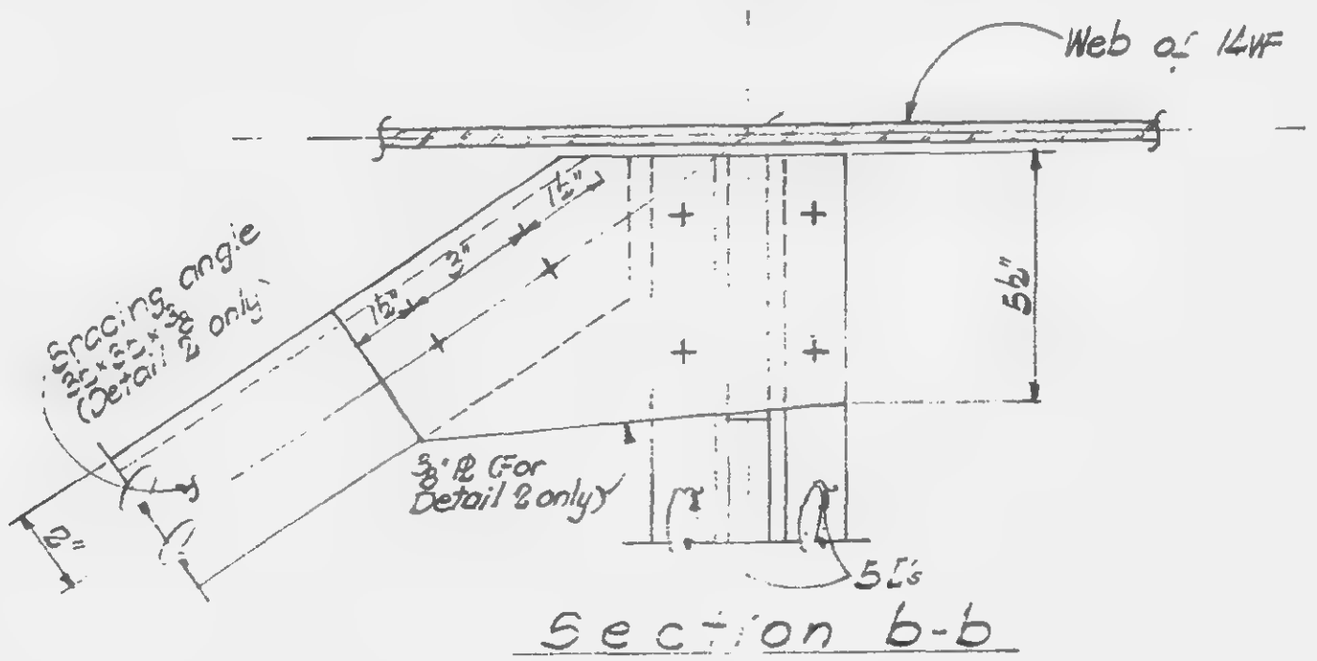

Section b-b

NOTES:

a. All bolts shown are ¾" ø H.S. A-325 friction type.

c. All steel to be A-36.

LICENSED PROFESSIONAL ENGINEER — LESLIE E. ROBERTSON — No. 34360 — UNIVERSITY OF THE STATE OF NEW YORK

DESIGNED

DRAWN S.C.

REVIEWED E.L.

12-JK3-52

SKILLING, HELLE, CHRISTIANSEN, ROBERTSON — Structural & Civil Engineers

PROJECT THE WORLD TRADE CENTER | TITLE UTILITY SUPPORTS ALONG EAST PERIMETER WALL | DATE 12-17-68

REVISIONS

4-18-69

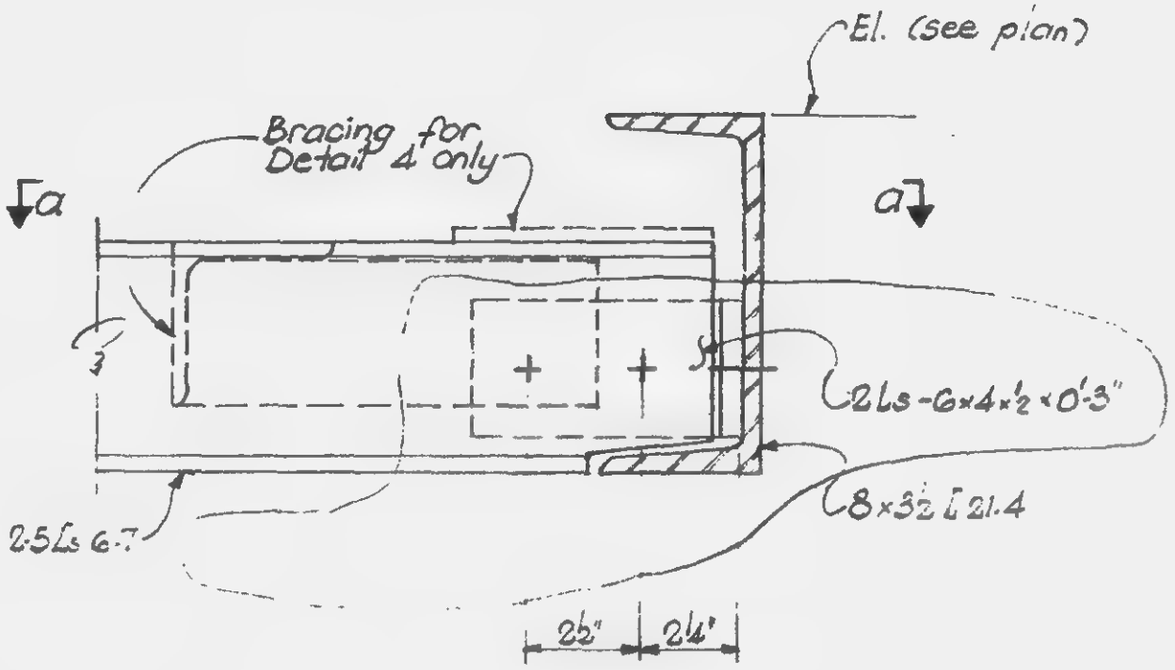

Detail 3
Detail 4

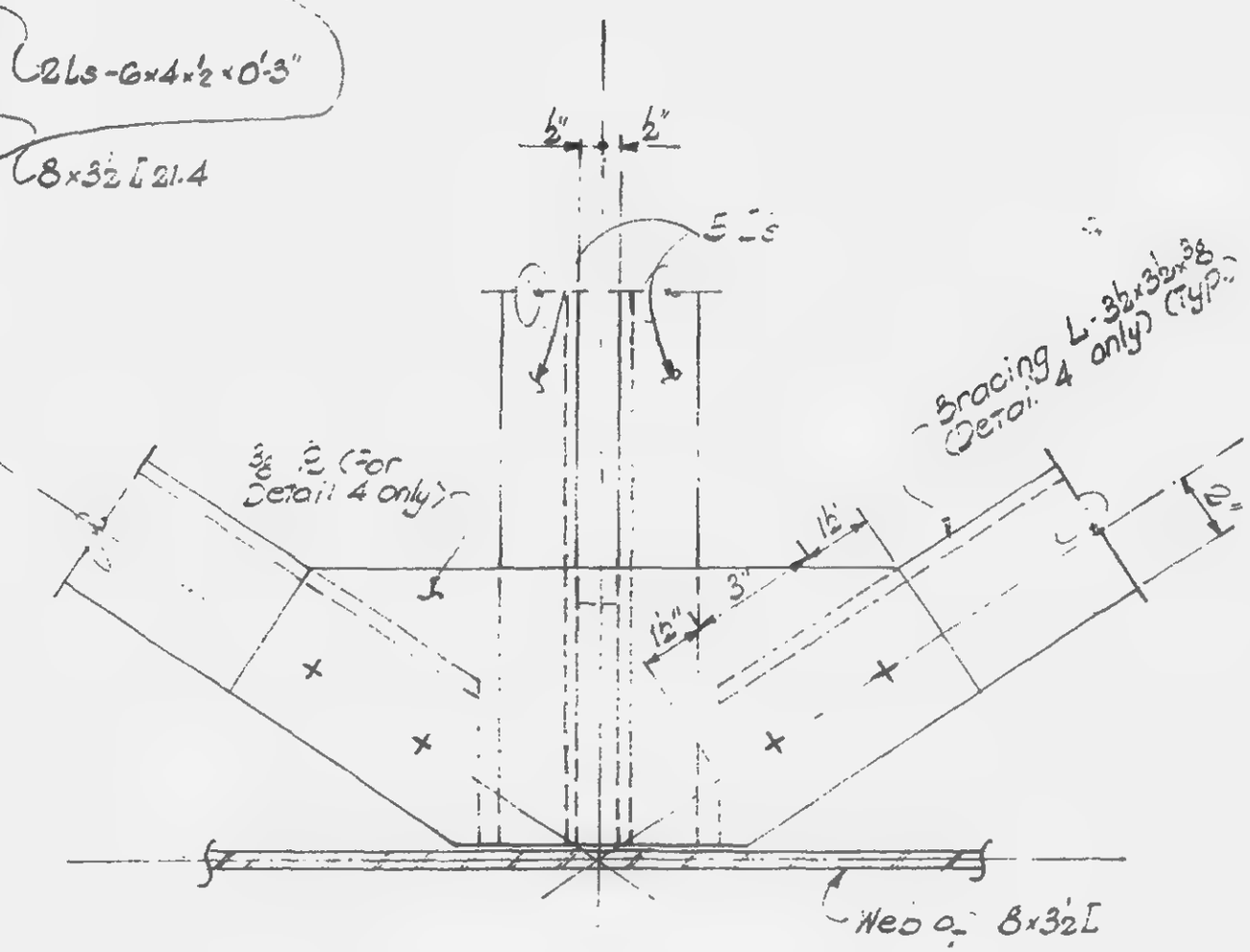

Section C-C

NOTES:

1. All bolts shown are ¾"ø H.S. A-325 friction type.
2. All steel to be A-36.

LICENSED PROFESSIONAL ENGINEER — LESLIE E. ROBERTSON — No. 34960 — UNIVERSITY OF THE STATE OF NEW YORK

DESIGNED

DRAWN S.C

REVIEWED E.L.

12-JA3-53

SKILLING, HELLE, CHRISTIANSEN, ROBERTSON — Structural & Civil Engineers

PROJECT: THE WORLD TRADE CENTER | TITLE: UTILITY SUPPORTS ALONG EAST PERIMETER WALL | DATE: 12-17-68

REVISIONS

5-29-69

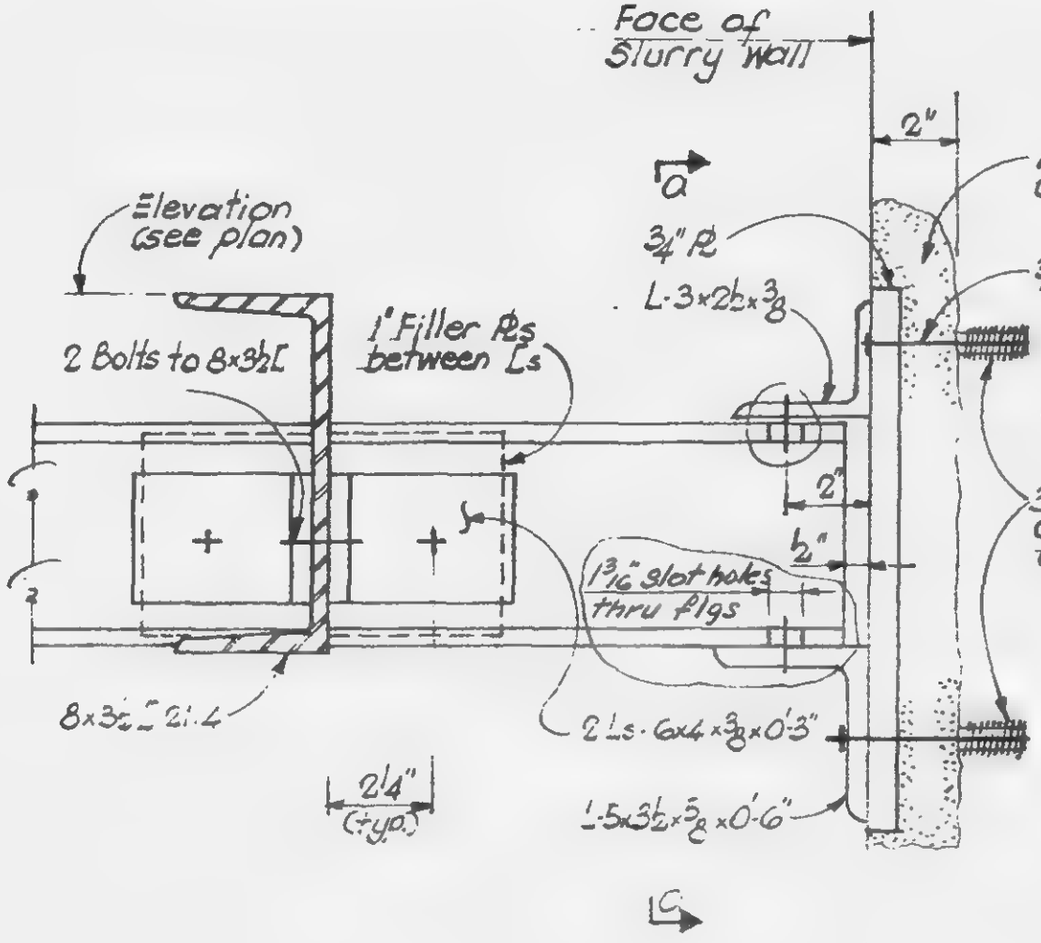

DETAIL 5

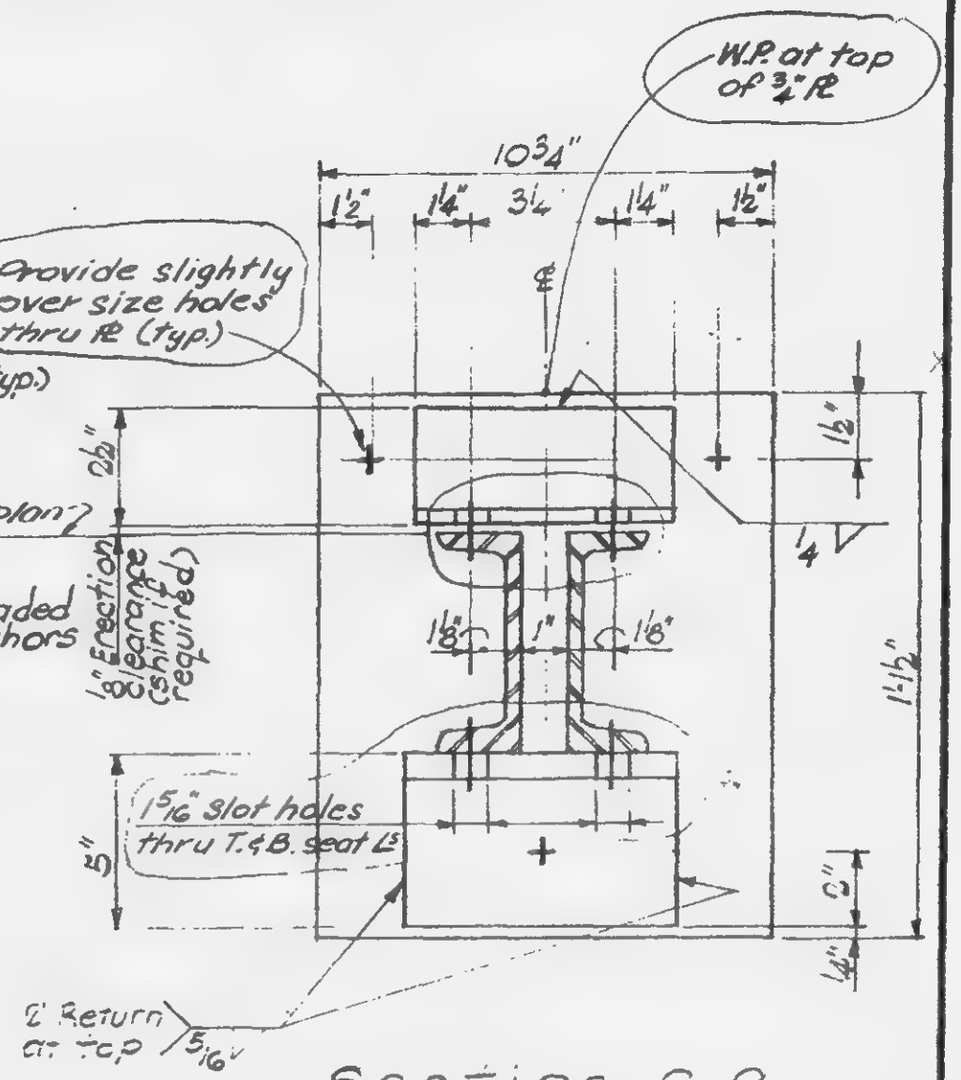

Section a-a

NOTES:

1. All bolts shown are 3/4" ϕ H.S. A-325 friction type.
2. All steel to be A-36.
3. All welds shown to be E70xx.
4. See 'Notes to Fabricator' on p.c.c.

LICENSED PROFESSIONAL ENGINEER — LESLIE E. ROBERTSON — No. 34360 — UNIVERSITY OF THE STATE OF NEW YORK

DESIGNED

DRAWN: SC

REVIEWED: E.L.

1C-JK3-54

SKILLING, HELLE, CHRISTIANSEN, ROBERTSON — Structural & Civil Engineers

PROJECT: THE WORLD TRADE CENTER | TITLE: UTILITY SUPPORTS ALONG EAST PERIMETER WALL | DATE: 12-17-68

REVISIONS

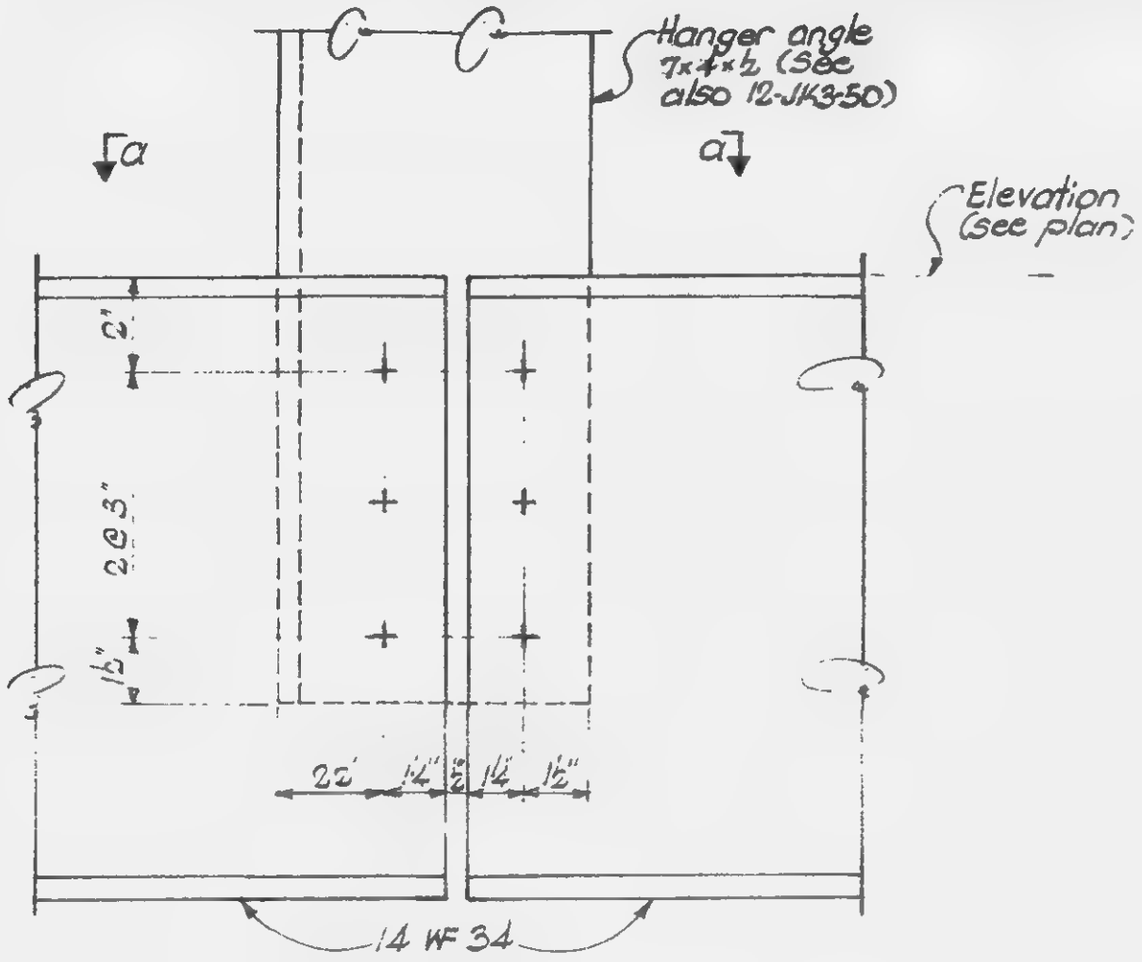

DETAIL 6

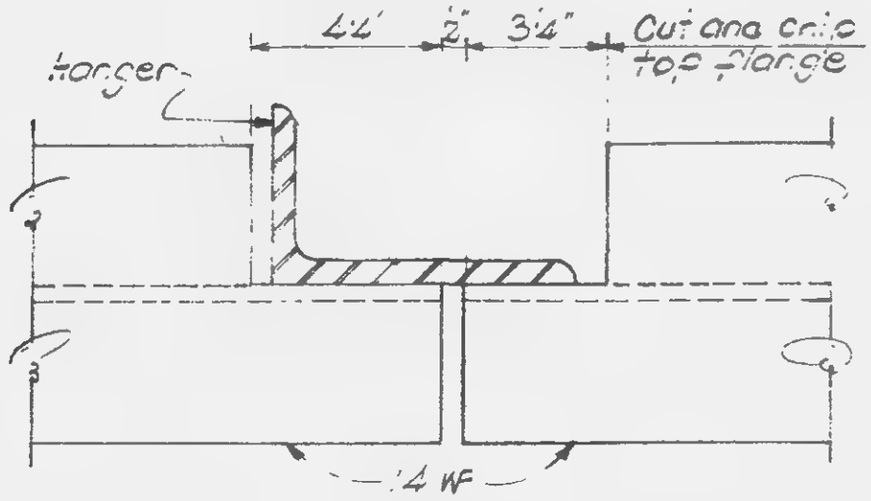

Section a-a

NOTES:
1. All bolts shown are ¾"ø H.S. A-325 friction type.
2. All steel to be A-36.

LICENSED PROFESSIONAL ENGINEER
LESLIE E. ROBERTSON
No 34360
UNIVERSITY OF THE STATE OF NEW YORK

DESIGNED

DRAWN

REVIEWED

12-JK3-55

SKILLING, HELLE, CHRISTIANSEN, ROBERTSON — Structural & Civil Engineers

PROJECT THE WORLD TRADE CENTER | TITLE UTILITY SUPPORTS ALONG EAST PERIMETER WALL | DATE 12-17-68

REVISIONS

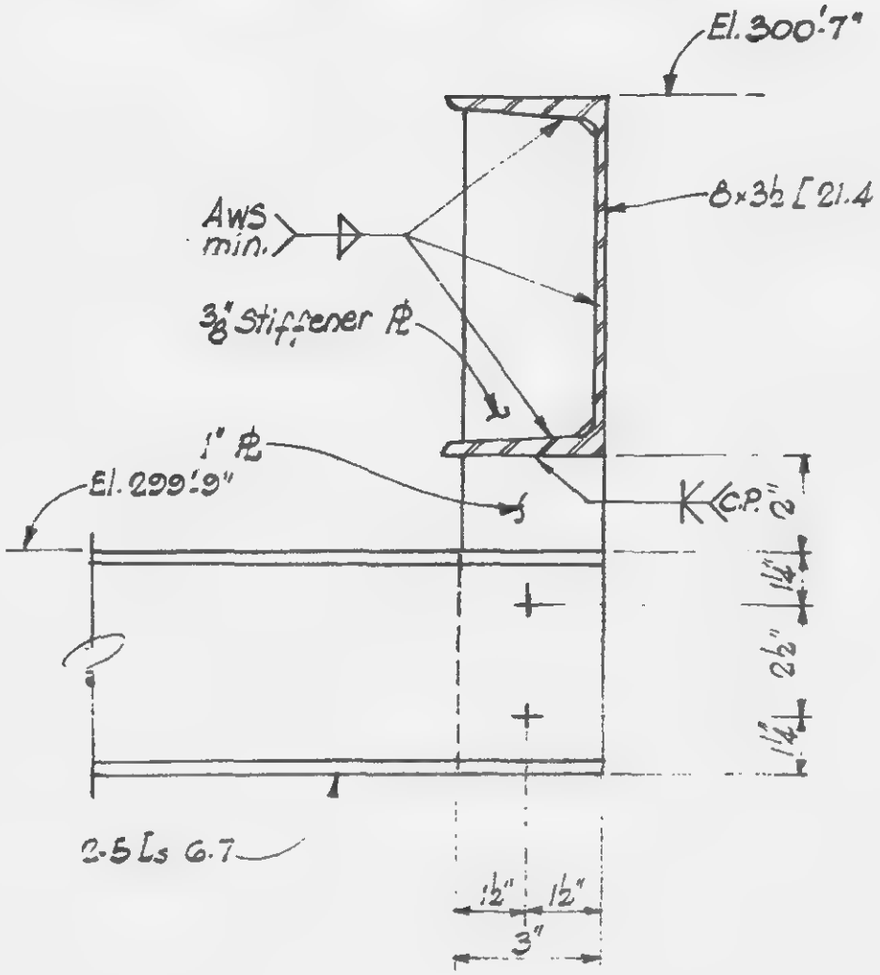

DETAIL 7

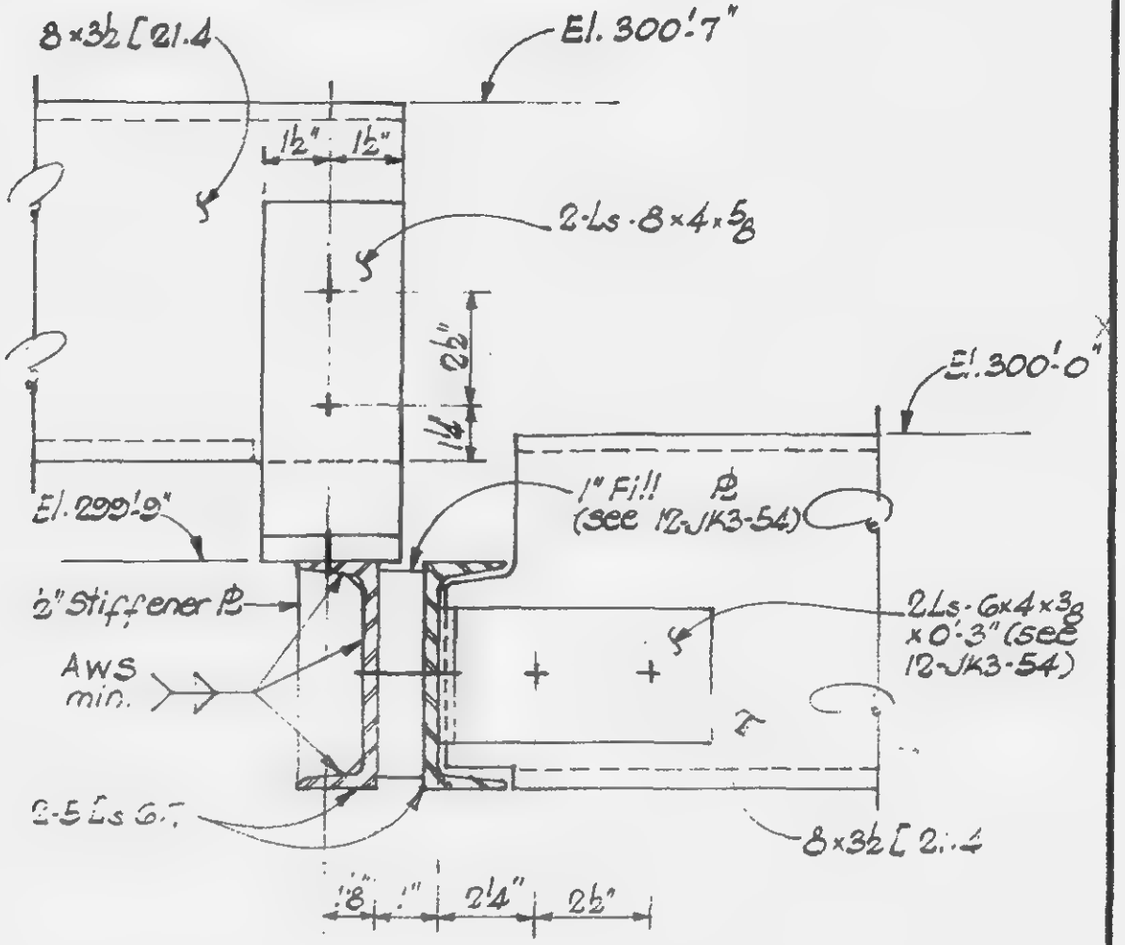

DETAIL 8

NOTES:

1. All bolts shown are ¾"ø A.S. A-325 friction type.
2. All steel to be A-36.

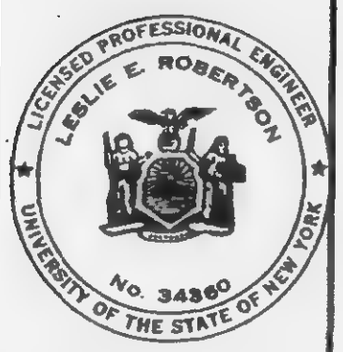

DESIGNED

REVIEWED

12-JK3-56

SKILLING, HELLE, CHRISTIANSEN, ROBERTSON — Structural & Civil Engineers

PROJECT: THE WORLD TRADE CENTER | TITLE: UTILITY SUPPORTS ALONG EAST PERIMETER WALL | DATE: 12-17-68

REVISIONS

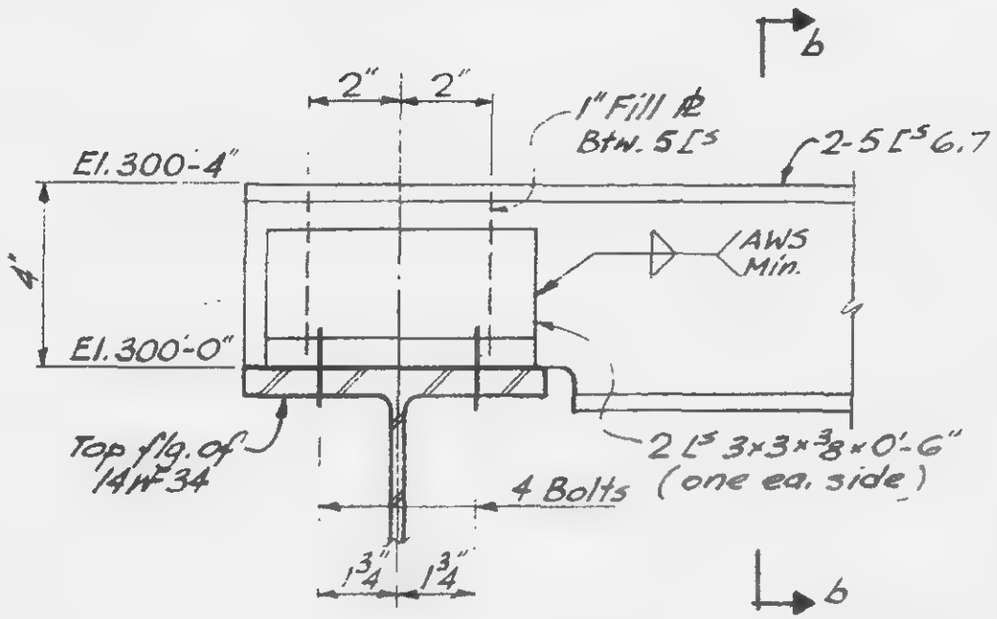

Detail 9

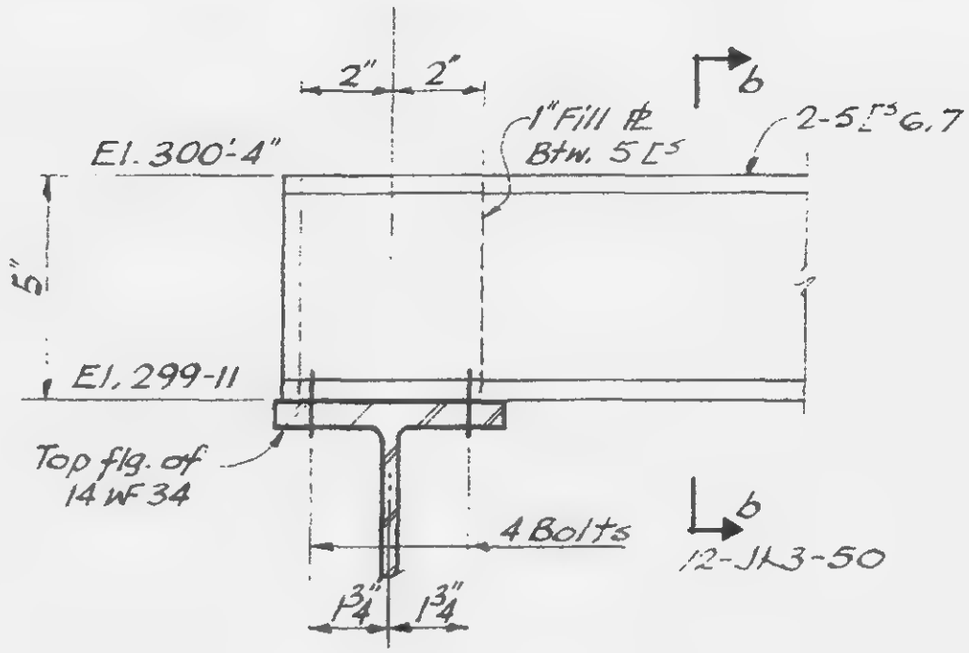

Detail 10

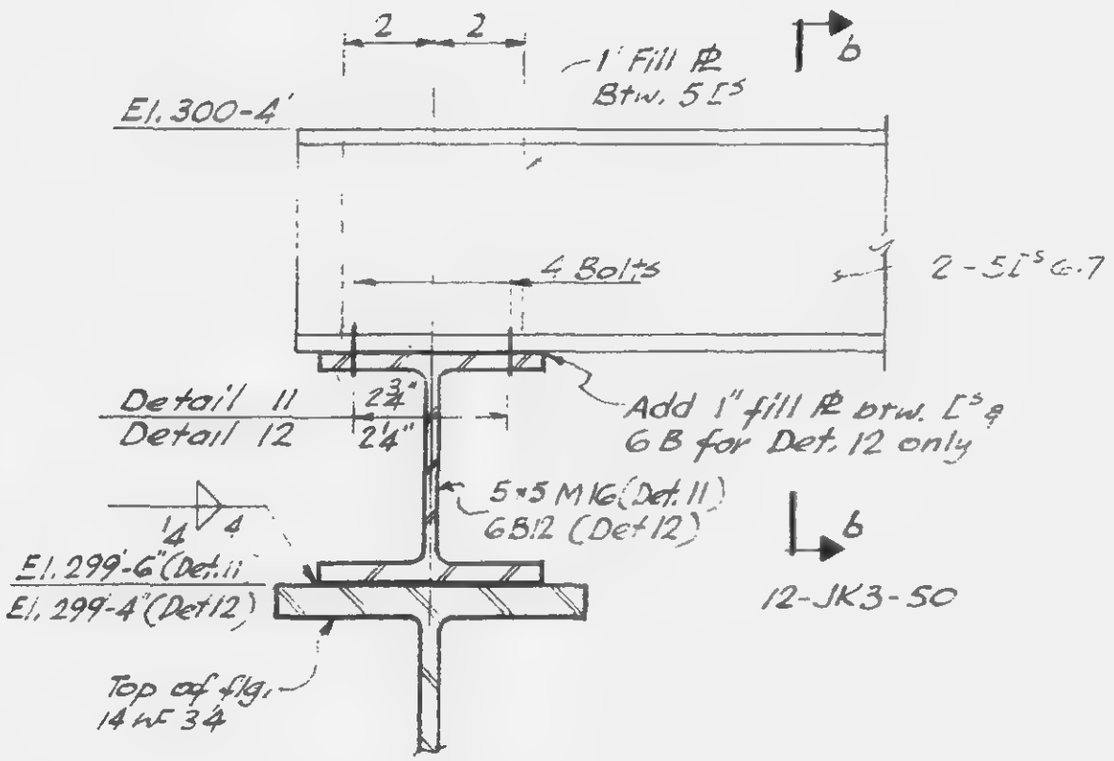

Detail 11

Detail 12

Notes:

1. All bolts shown are 3/4 ϕ A.S.T.M. A 325 Friction type
2. All steel to be A-36
3. All welds to be E70.X.X

LICENSED PROFESSIONAL ENGINEER — LESLIE E. ROBERTSON — No. 34960 — UNIVERSITY OF THE STATE OF NEW YORK

DESIGNED

DRAWN

REVIEWED

2-JK3-57

SKILLING, HELLE, CHRISTIANSEN, ROBERTSON — Structural & Civil Engineers

PROJECT THE WORLD TRADE CENTER | TITLE UTILITY SUPPORTS ALONG EAST PERIMETER WALL | DATE 12-17-68

REVISIONS

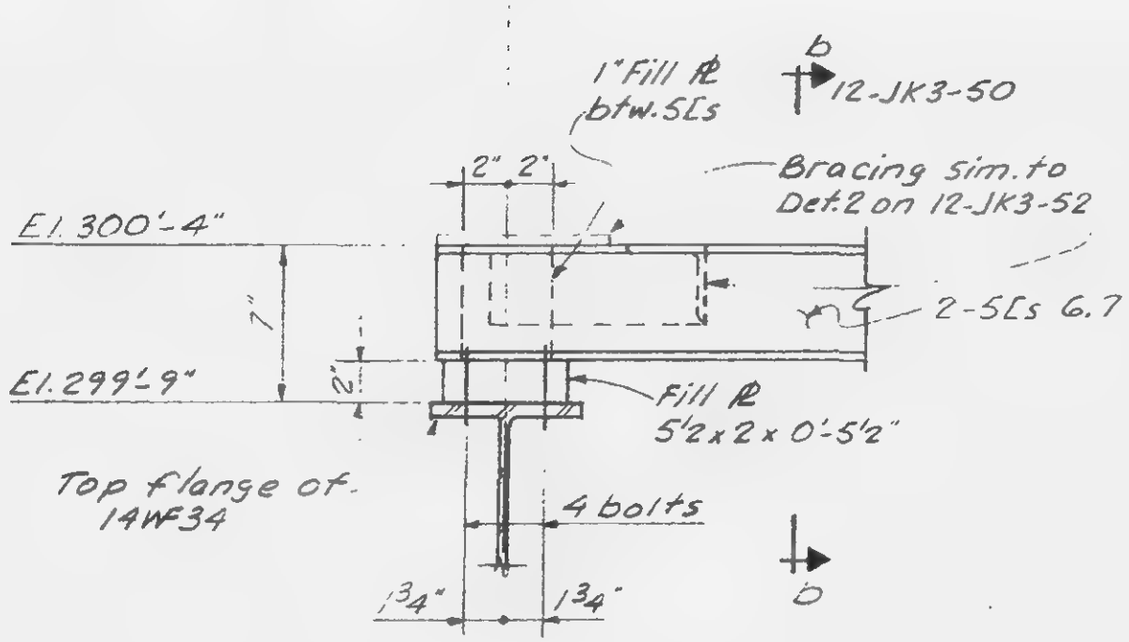

DETAIL – 13

LICENSED PROFESSIONAL ENGINEER
LESLIE E. ROBERTSON
No 34960
UNIVERSITY OF THE STATE OF NEW YORK

DESIGNED

DRAWN

REVIEWED

12-JK3-58

SKILLING, HELLE, CHRISTIANSEN, ROBERTSON — Structural & Civil Engineers

PROJECT THE WORLD TRADE CENTER | TITLE UTILITY SUPPORT ALONG EAST SLURRY WALL | DATE 12-17-68

REVISIONS

5-29-69

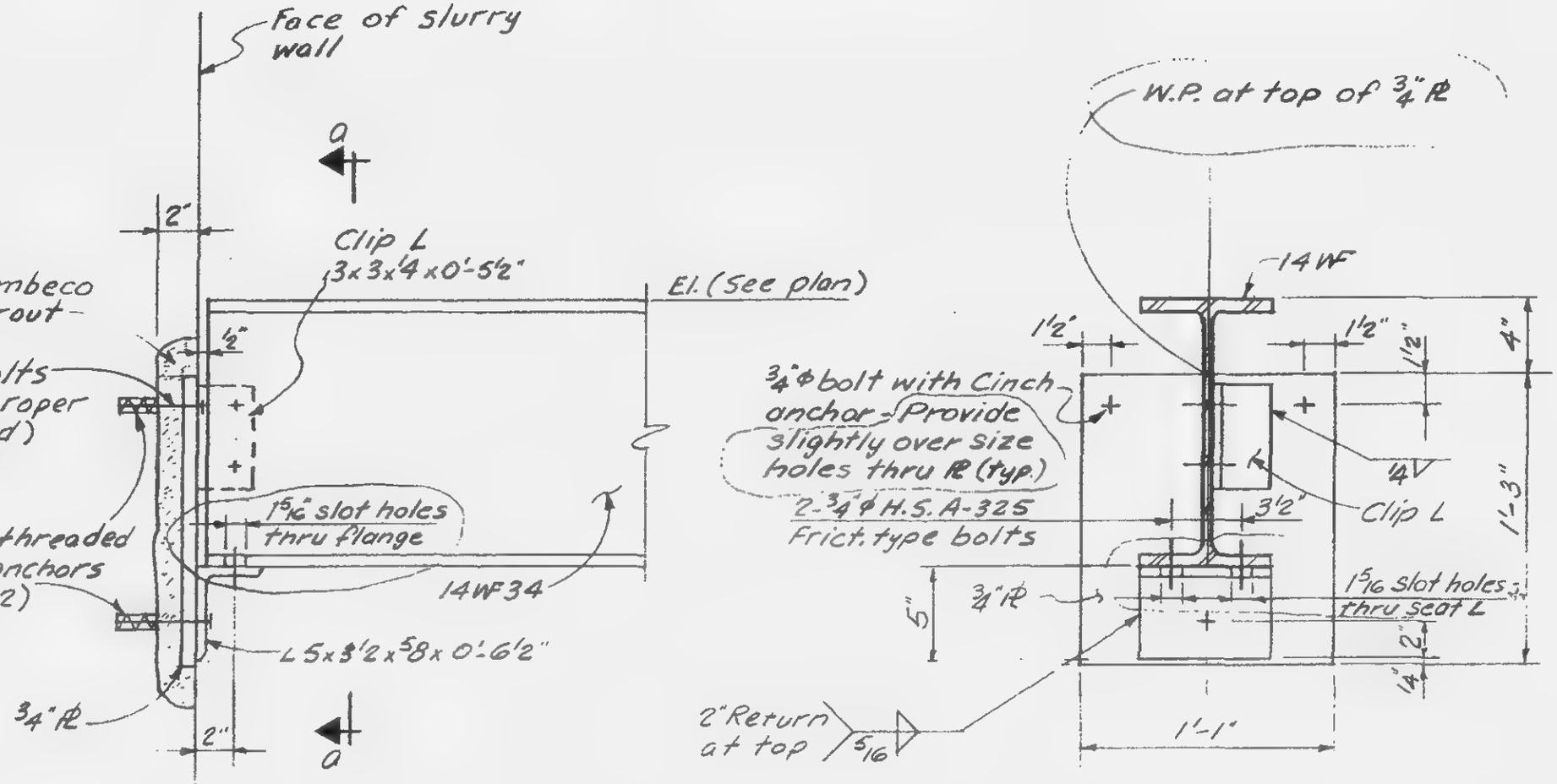

Section a-a

DETAIL - 14

Notes:

1. All welds to be E70xx.
2. All steel to be A-36.

LICENSED PROFESSIONAL ENGINEER — LESLIE E. ROBERTSON — No. 34360 — UNIVERSITY OF THE STATE OF NEW YORK

DESIGNED

DRAWN S.C.

REVIEWED E.L.

12-JK3-59

SKILLING, HELLE, CHRISTIANSEN, ROBERTSON — Structural & Civil Engineers

PROJECT: THE WORLD TRADE CENTER | TITLE: MOMENT CONNECTION SCHEDULE AT EL. 352' | DATE: 1-13-69

REVISIONS
9-16-69

GIRDER TO COLUMN FLANGE

Connection Detail No. & Type		Bolts "A"		Bolts "B"		Plates (in.) #1	Plates (in.) #2			Weld (in.) #1				Remark
No.	Type	Total No of Bolts	Diam.(in)	Total No of Bolts	Diam.(in)	t_1	t_2							
1	(I-A)	8	1⅛	18	1⅛	½*	1			⅜				
2	(I-A)	8	1⅛	16	1⅛	½*	⅞			⅜				
3	(I-A)	8	1⅛	14	1⅛	½*	¾			⅜				
4	(I-A)	7	1	14	1⅛	⅜*	¾			⅜				
5	(I-A)	8	1⅛	12	1⅛	½*	⅝			⅜				
6	(I-A)	7	1	12	1⅛	⅜*	⅝			⅜				
7	(I-A)	6	1	12	1	⅜*	½			⅜				
8	(I-A)	6	1	10	1	⅜*	7/16			⅜				
9	(I-A)	8	1⅛	20	1⅛	½*	1			⅜				

Notes:
1. See Dwg. 12-JK4-4 for explanation of schedule.

LICENSED PROFESSIONAL ENGINEER — LESLIE E. ROBERTSON — No. 34360 — STATE OF NEW YORK

DESIGNED

DRAWN
S.C

REVIEWED
R.T. & E.L.

12-JK4-2

SKILLING, HELLE, CHRISTIANSEN, ROBERTSON — Structural & Civil Engineers

PROJECT: THE WORLD TRADE CENTER | TITLE: MOMENT CONNECTION SCHEDULE AT EL. 332' | DATE: 7-13-69

REVISIONS
9-16-69

GIRDER TO COLUMN WEB

Connection Detail No. & Type		Bolts				Plates			Weld			Remark
		"A"		"B"		#1	#2					
No.	Type	Total No. of Bolts	Diam.	Total No. of Bolts	Diam.	t_1	t_2		#1	#2		
1	(II-A)	7	1	12	1 1/8	1/2*	3/4		3/8	3/8		
2	(II-A)	6	1	12	1	3/8*	5/8		5/16	5/16		
3	(II-A)	6	1	10	1	3/8*	1/2		5/16	5/16		
4	(II-A)	8	1	10	1	3/8*	1/2		5/16	5/16		

Notes:
1. See Dwg. 12-JK4-4 for explanation of schedule.

LICENSED PROFESSIONAL ENGINEER — LESLIE E. ROBERTSON — No. 34360 — STATE OF NEW YORK

DRAWN: S.C.
REVIEWED: R.T. & E.L.

12-JK4-3

SKILLING, HELLE, CHRISTIANSEN, ROBERTSON — Structural & Civil Engineers

PROJECT: THE WORLD TRADE CENTER | TITLE: GIRDER TO COLFLANGE & WEB MOMENT CONN. DETAIL | DATE: 1-15-69

REVISIONS
9-16-69

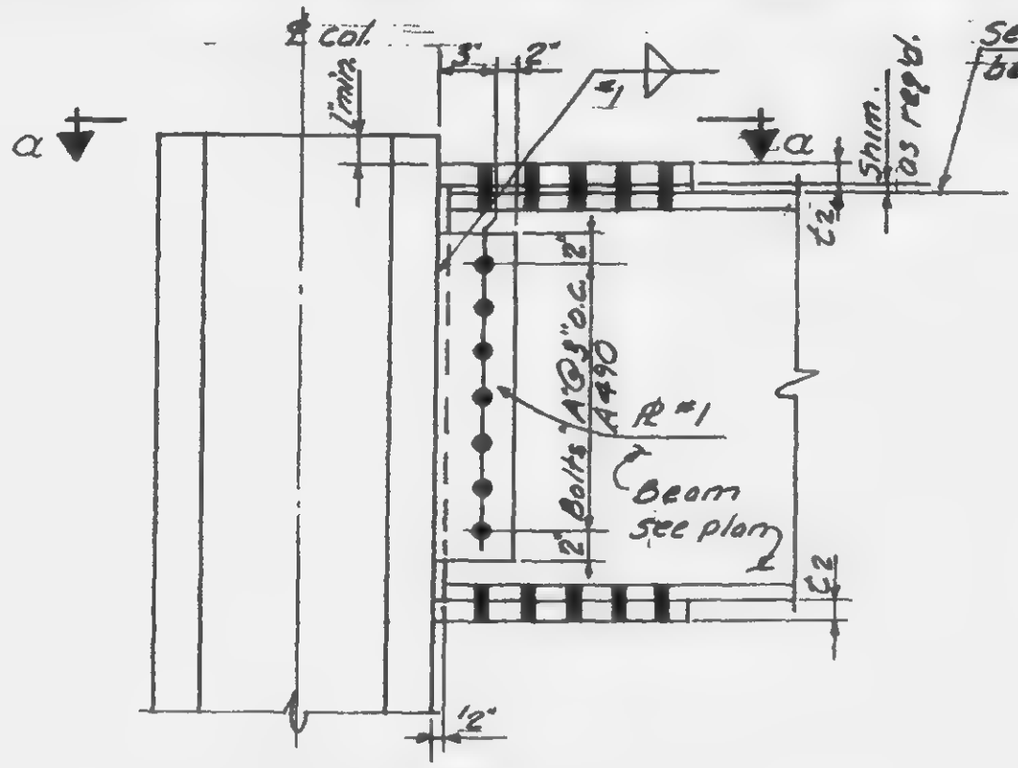

TYPE (I-A) ELEVATION

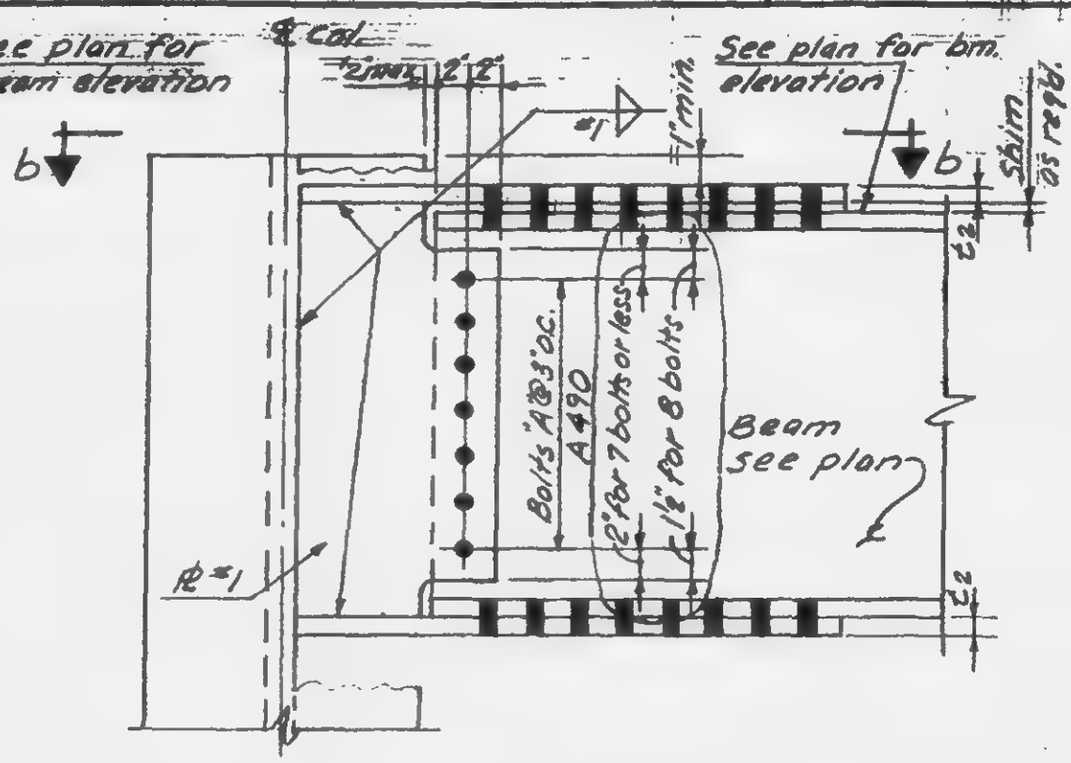

TYPE (II-A) ELEVATION

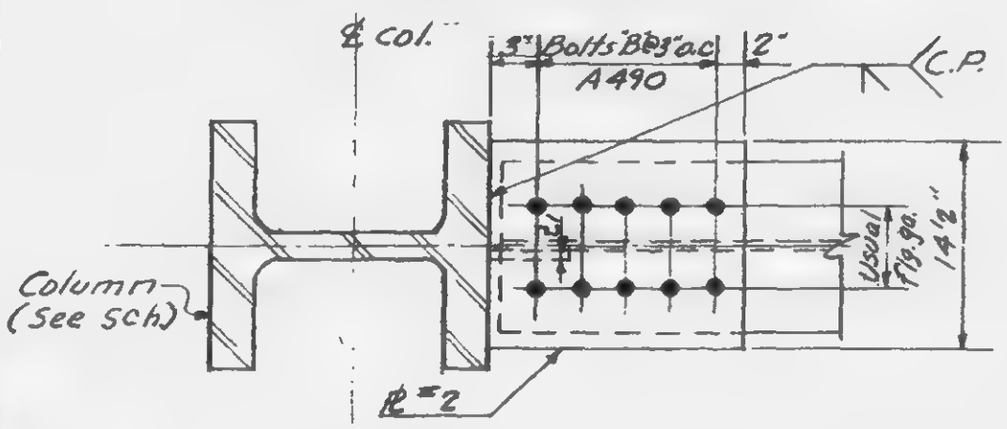

Section a-a
(Typ. Top & Bottom Flange)

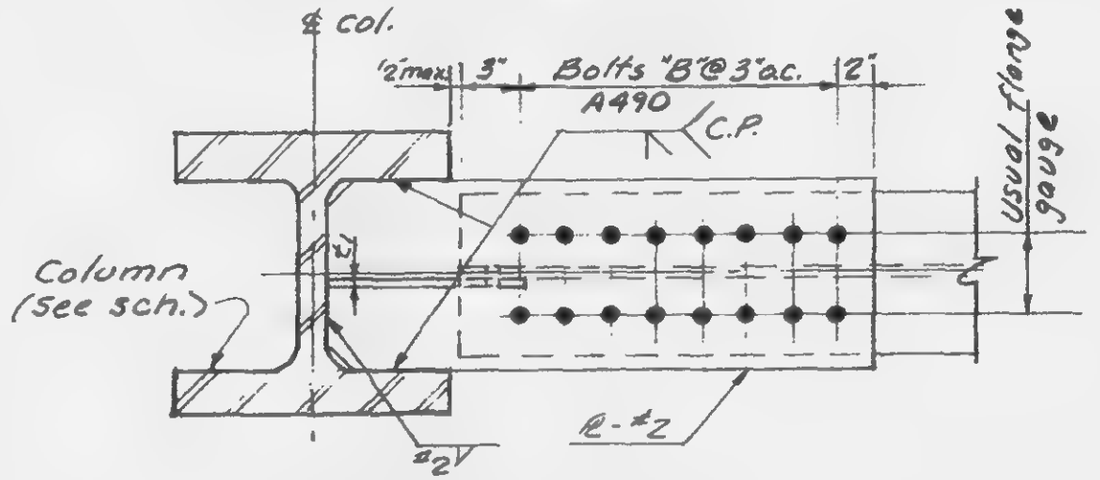

Section b-b
(Typ. Top & Bottom Flange)

Notes:

1. All #s to be Fy = 56 ksi except as noted.
   * —— Fy = 36 ksi
   ** —— Fy = 42 ksi
2. All bolts shown to be H.S. Friction Type.
3. All welds to be E70xx.
4. Type I-B & II-B —— 2 rows of group 'A' bolts.
   Type I-C & II-C —— 4 rows of group 'B' bolts.
   Type I-D & II-D —— 2 rows of group 'A' bolts & 4 rows of group 'B' bolts.
5. See schedules 12-JK4-2 & 12-JK4-3 for bolts, plates & weld.

LICENSED PROFESSIONAL ENGINEER — LESLIE E. ROBERTSON — No. 34960 — STATE OF NEW YORK

DESIGNED
DRAWN S.C.
REVIEWED R.T. & E.L.

12-JK4-4

SKILLING, HELLE, CHRISTIANSEN, ROBERTSON — Structural & Civil Engineers

PROJECT: THE WORLD TRADE CENTER | TITLE: BEAM CONNECTION DETAIL TO TOWER (SEC. 332) | DATE: FEB '69

REVISIONS
10-14-69
10-23-69
12-8-69
4-7-72

Detail No.	Existing Seat at Tower Columns			Beam Detail	
	Seat Type Conn.	B	Elev. at Top of Seat	A	C
A-1	G	6½"	328'-3⅝"	1'-0"	1½"
A-2	H	8"	328'-9⅛"	0'-9"	1½"
A-3	G	5½"	329'-0¼"	—	1½"
A-4	H	6"	329'-5"	1'-0"	1½"
A-5	G	6"	329'-3"	0'-9"	1½"
A-6	G-1	5"	328'-2½"	—	1½"
A-7	G-1	5"	324'-1"	—	1½"
A-8	G-1	5"	322'-8½"	—	1½"
A-9	G-1	5"	318'-7"	—	1½"
A-10	G-1	5"	317'-2½"	—	1½"
A-11	G-1	5"	313'-1"	—	1½"
A-12	G-1	5"	311'-8½"	—	1½"
A-13	G	6"	329'-3"	—	1½"

Detail No.	Existing Seat at Tower Columns			Beam Detail	
	Seat Type Conn.	B	Elev. at Top of Seat	A	C
B-1	G	6½"	328'-5¾"	1'-0"	1½"
B-2	H	8"	328'-5¾"	0'-9"	1½"
B-3	H	5"	329'-3⅝"	0'-9"	1½"
B-4	G-1	5½"	329'-3⅝"	0'-9"	1½"
B-5	G	5½"	329'-3⅝"	0'-9"	1½"
B-6	G-1	5"	324'-1"	0'-9"	1½"
B-7	G-1	5"	322'-8½"	0'-9"	1½"
B-8	G-1	5"	318'-7"	0'-9"	1½"
B-9	G-1	5"	317'-2½"	0'-9"	1½"
B-10	G-1	5"	313'-1"	0'-9"	1½"
B-11	G-1	5"	311'-8½"	0'-9"	1½"
* B-12	G-1	5½"	328'-2½"	0'-9"	1½"

NOTES:
1. See Dwg. 12-JK4-6 for explanation of schedule.

* Remove existing seat from Tower column and field weld new seat as shown on 12-JK4-7

LICENSED PROFESSIONAL ENGINEER — LESLIE E. ROBERTSON — No. 34960 — STATE OF NEW YORK

DESIGNED

DRAWN: J. Adams

REVIEWED: R.T. & E.L.

12-JK4-5

SKILLING, HELLE, CHRISTIANSEN, ROBERTSON — Structural & Civil Engineers

PROJECT: THE WORLD TRADE CENTER | TITLE: BEAM CONNECTION DETAIL TO TOWER (EL. 332) | DATE: 6-15-69

REVISIONS
10-23-69
12-8-69

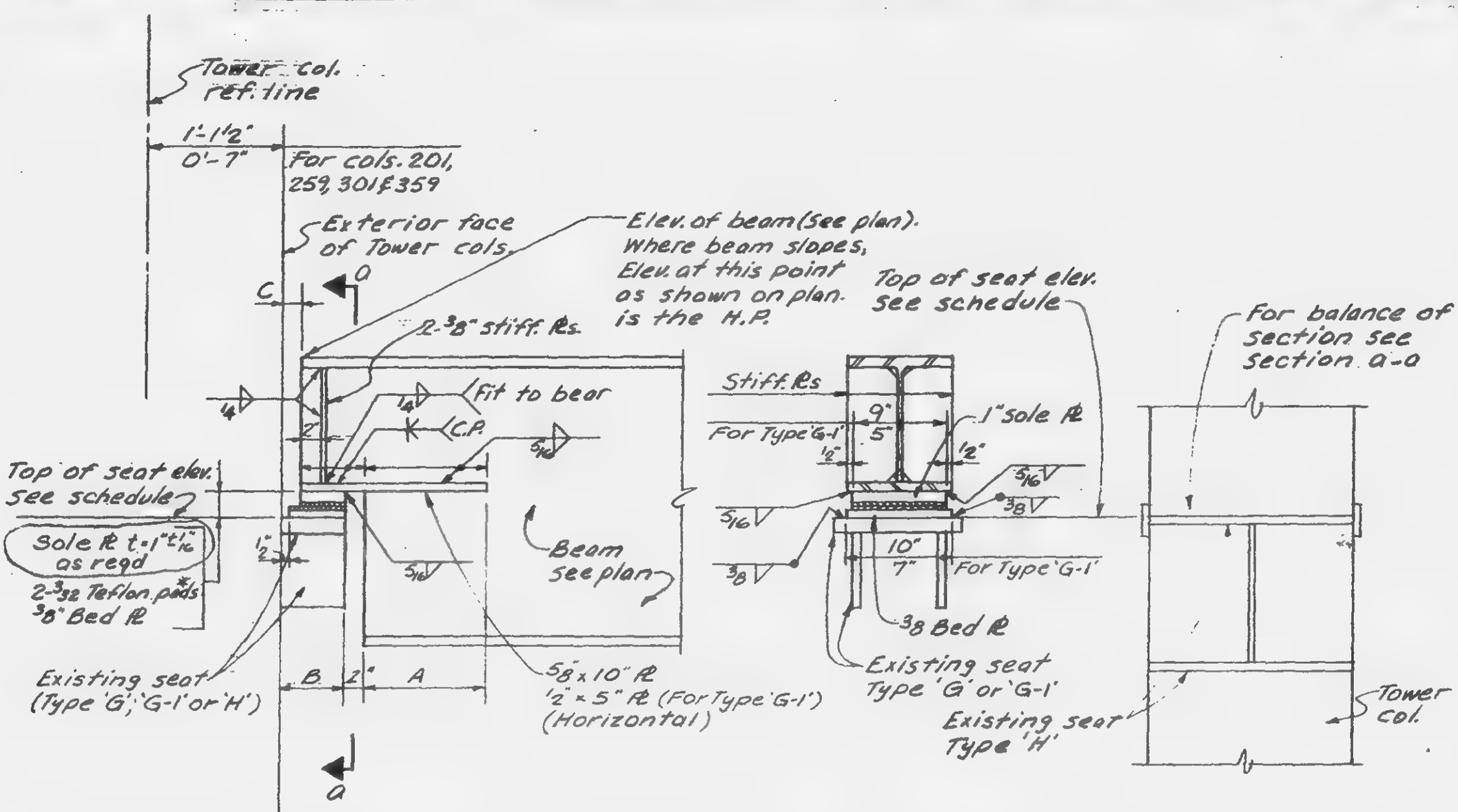

Elevation | Section a-a | Section a1-a1

*Teflon pads to have a bearing capacity of 2000 psi.

LICENSED PROFESSIONAL ENGINEER — LESLIE E. ROBERTSON — No. 34960 — UNIVERSITY OF THE STATE OF NEW YORK

DESIGNED
DRAWN S.C.
REVIEWED R.T. & E.L.

12-JK4-6

SKILLING, HELLE, CHRISTIANSEN, ROBERTSON — Structural & Civil Engineers

PROJECT: THE WORLD TRADE CENTER

TITLE: BEAM CONNECTION DETAIL TO TOWER (EL. 952')

DATE: 12-8-69

REVISIONS

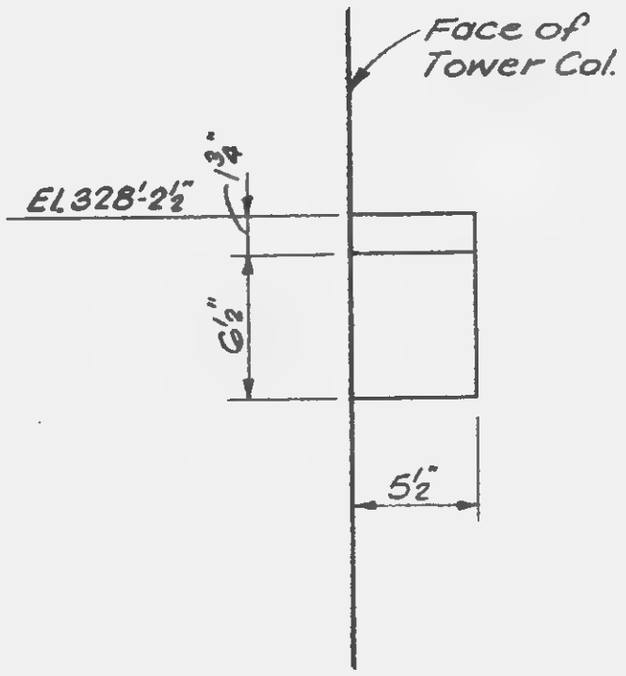

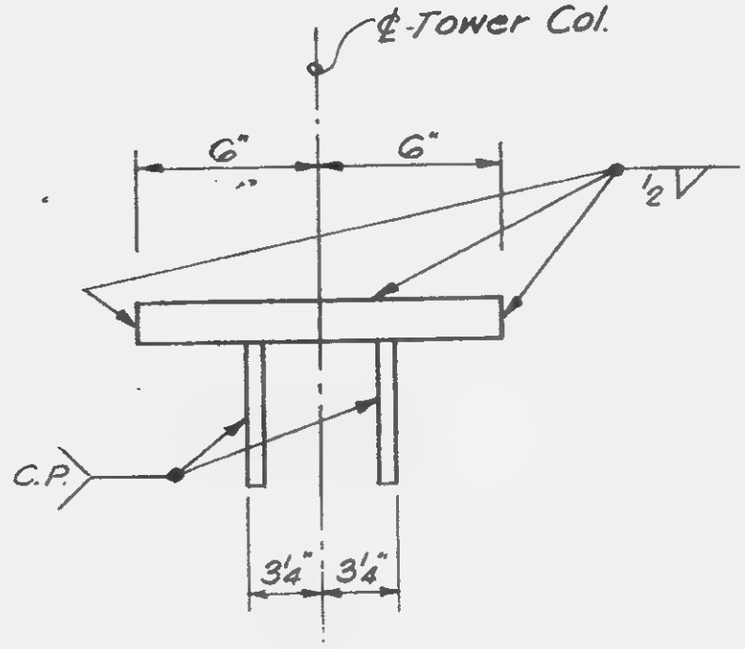

LICENSED PROFESSIONAL ENGINEER
LESLIE E. ROBERTSON
No. 34360
UNIVERSITY OF THE STATE OF NEW YORK

DESIGNED

DRAWN
S.C.

REVIEWED
E.L.

12-JK4-7

SKILLING, HELLE, CHRISTIANSEN, ROBERTSON — Structural & Civil Engineers

PROJECT: THE WORLD TRADE CENTER | TITLE: BEAM CONNECTION DETAIL TO TOWER-EL 332' | DATE: 4-7-72

REVISIONS

7/19/72

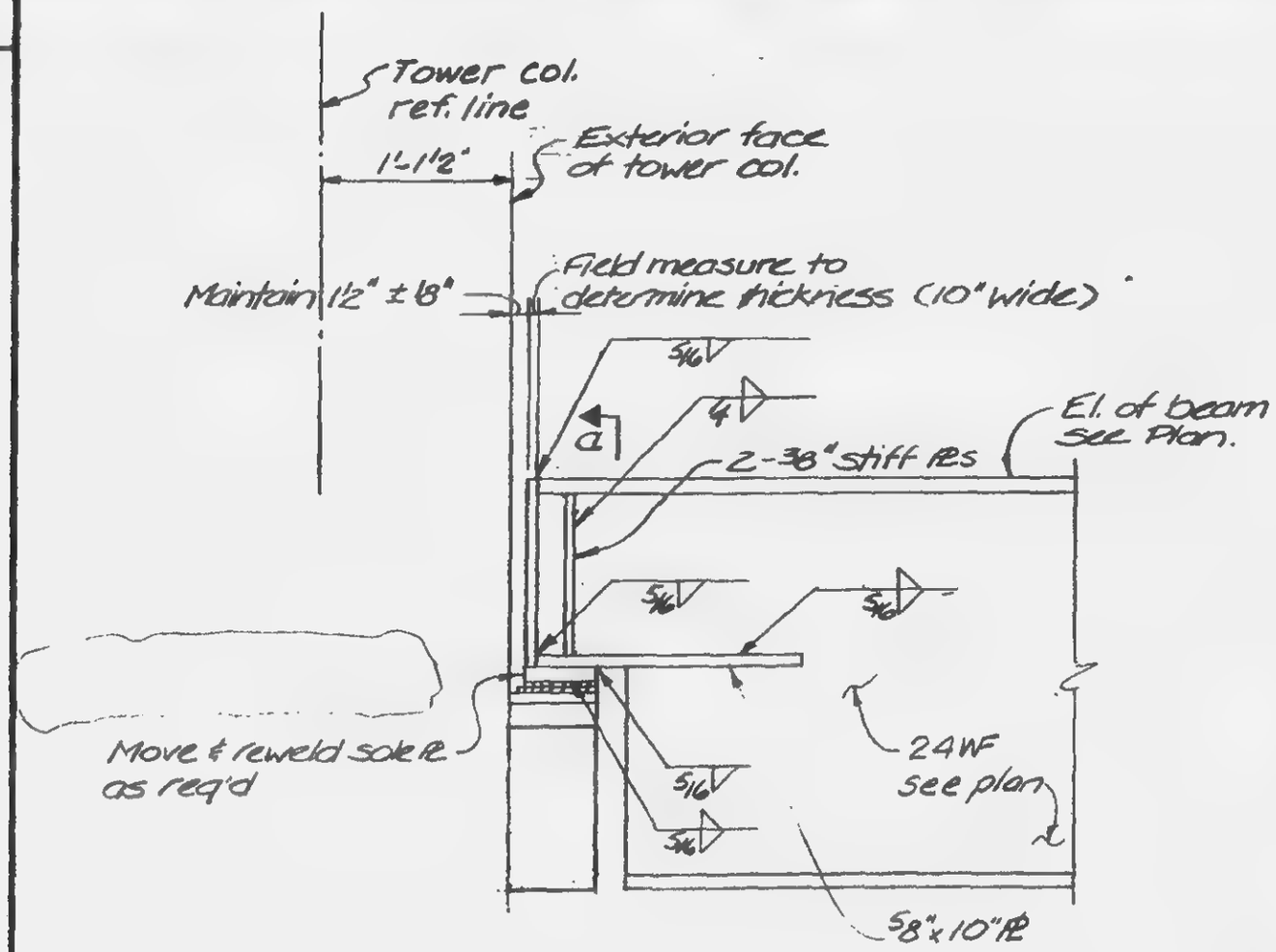

Elevation

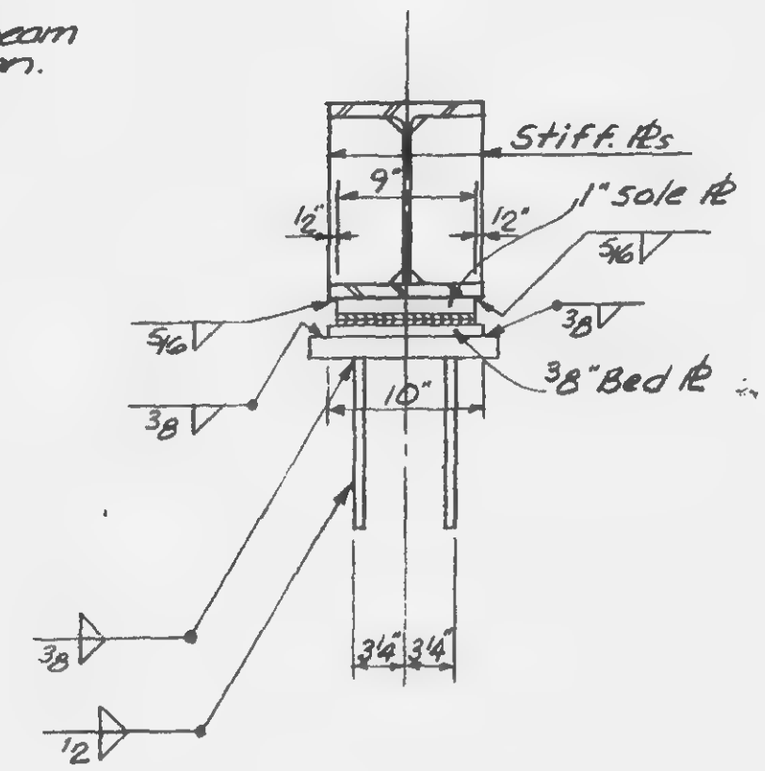

Section a-a

* Teflon pads to have a bearing capacity of 2000 psi.

LICENSED PROFESSIONAL ENGINEER — LESLIE E. ROBERTSON — No 34980 — UNIVERSITY OF THE STATE OF NEW YORK

DESIGNED

DRAWN A. Frangui

REVIEWED

12-JK4-8

SKILLING, HELLE, CHRISTIANSEN, ROBERTSON — Structural & Civil Engineers

PROJECT: THE WORLD TRADE CENTER | TITLE: BEAM TO COLUMN CONNECTION | DATE: 1-13-69

REVISIONS

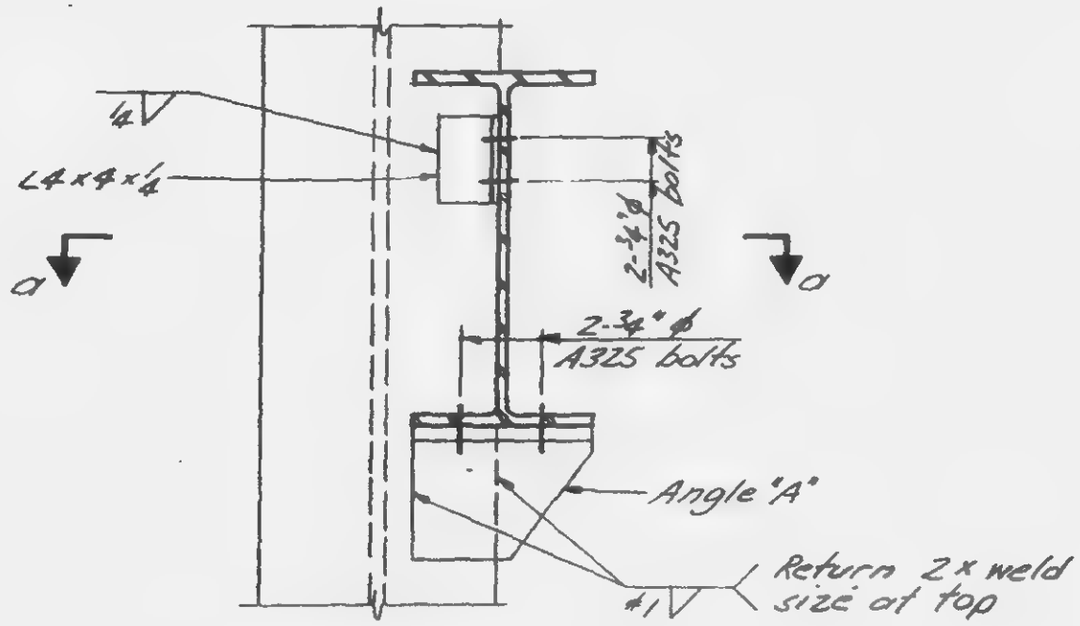

Elevation

Det. No.	Angle "A" (Fy36)	Weld #1 E70XX
1	9x4x1	S_B

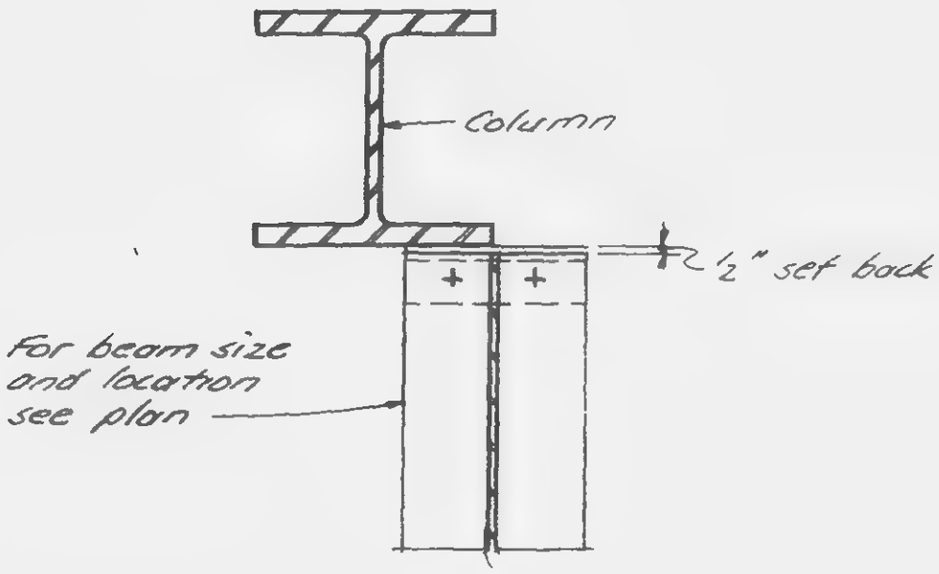

Section a-a

LICENSED PROFESSIONAL ENGINEER — LESLIE E. ROBERTSON — No. 24360 — STATE OF NEW YORK

DESIGNED

DRAWN: J Adams

REVIEWED: R.T. & E.L.

12-JK4-9

SKILLING, HELLE, CHRISTIANSEN, ROBERTSON — Structural & Civil Engineers

PROJECT: THE WORLD TRADE CENTER | TITLE: BEAM TO COLUMN WEB CONNECTION | DATE: 1-13-69

REVISIONS

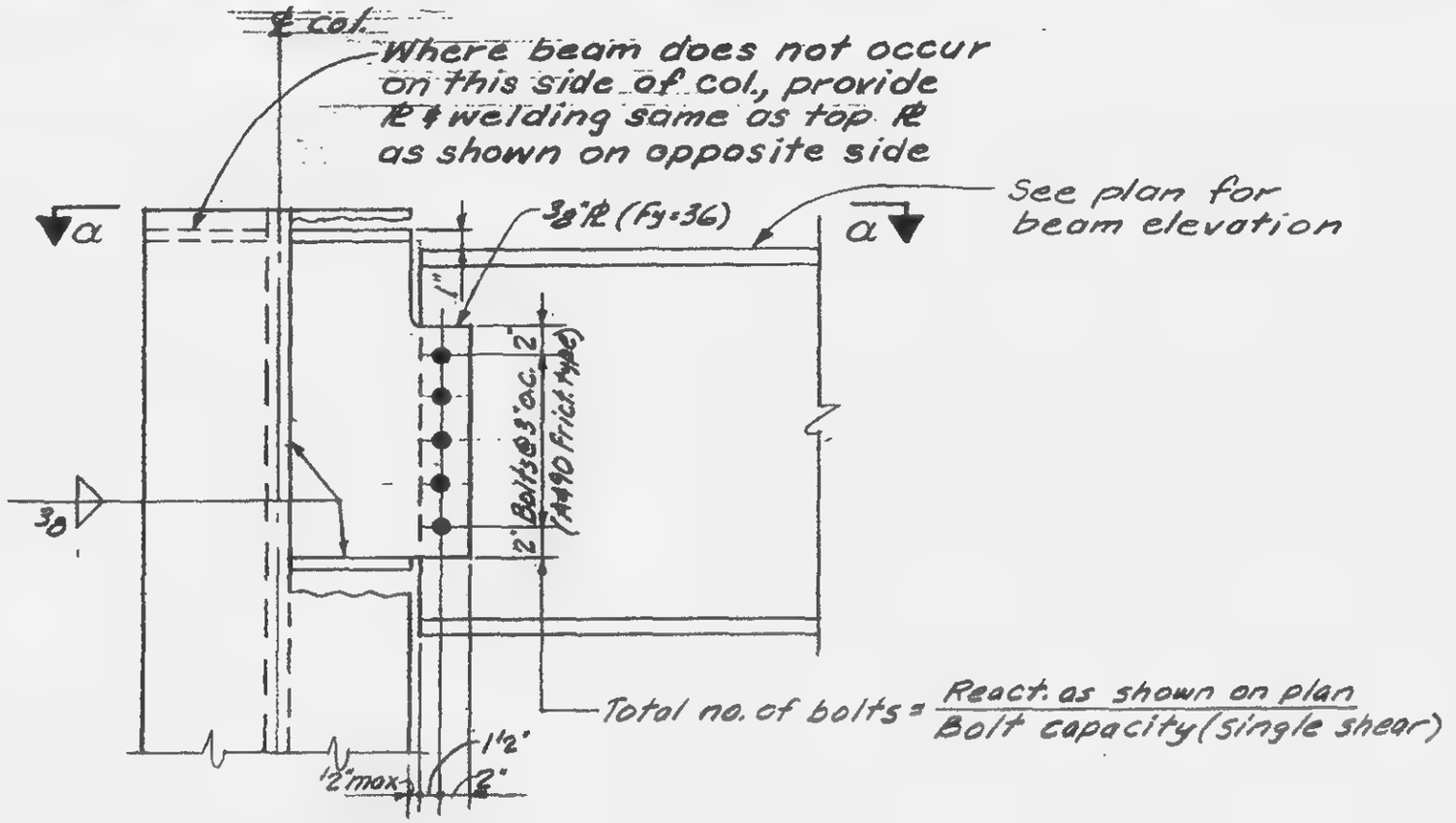

ELEVATION

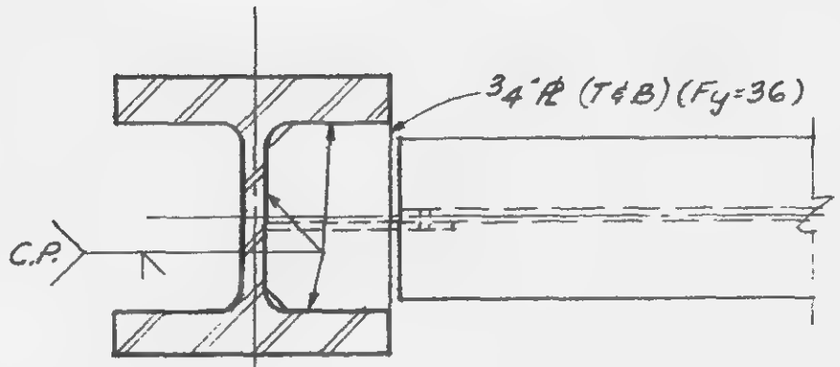

Section a-a

LICENSED PROFESSIONAL ENGINEER — LESLIE E. ROBERTSON — No. 34360 — UNIVERSITY OF THE STATE OF NEW YORK

DESIGNED

S.C.

REVIEWED

R.T. & E.L.

12-JK4-10

SKILLING, HELLE, CHRISTIANSEN, ROBERTSON — Structural & Civil Engineers

PROJECT THE WORLD TRADE CENTER | TITLE DETAIL OF TEMPORARY STRUT (EL. 332') | DATE 4-8-70

REVISIONS

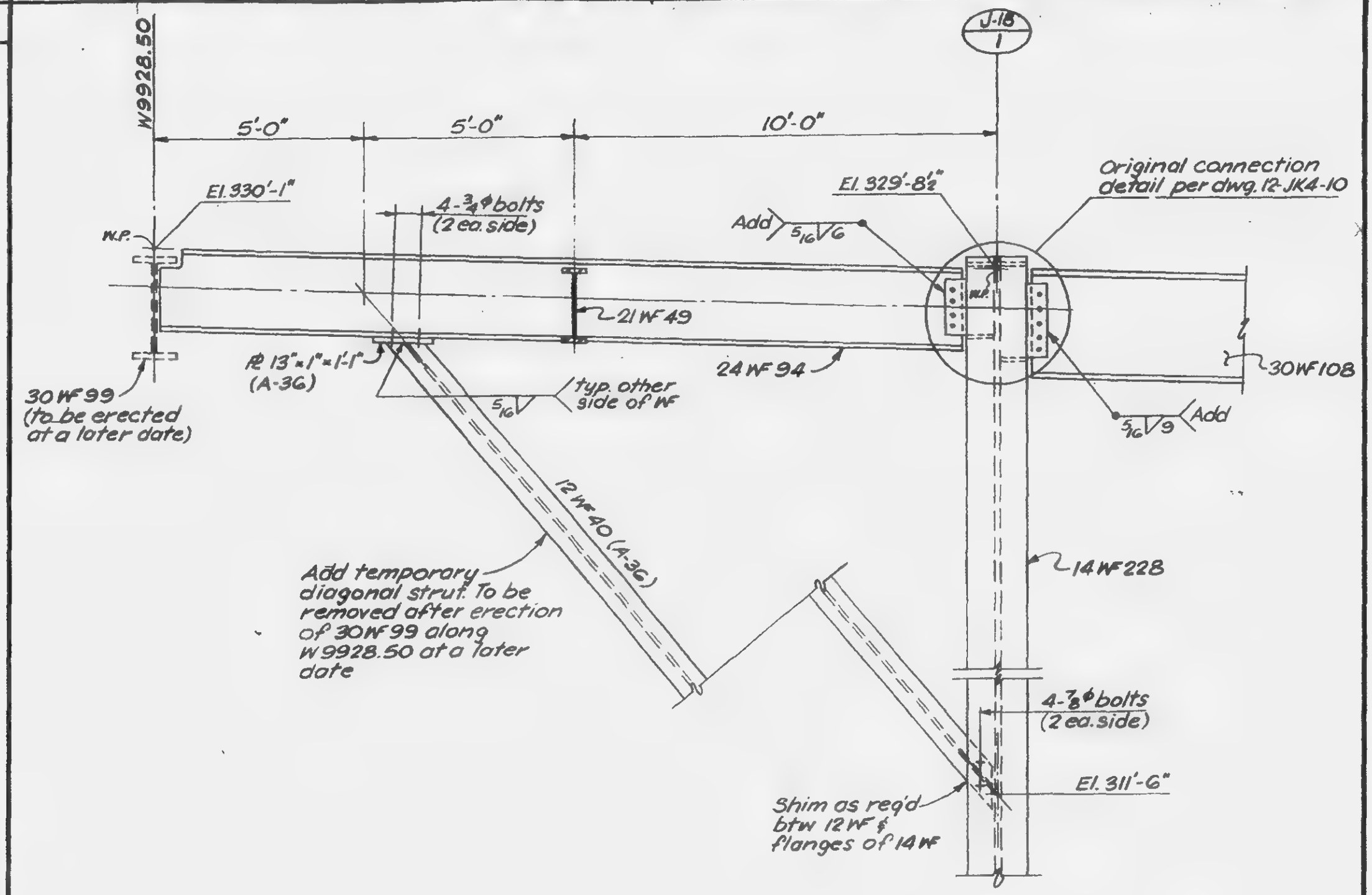

Notes:

1. All welds to be E70xx
2. All bolts to be A-325 H.S. friction type.

LICENSED PROFESSIONAL ENGINEER
LESLIE E. ROBERTSON
No. 34360
UNIVERSITY OF THE STATE OF NEW YORK

DESIGNED

DRAWN
S.C.

REVIEWED
E.L.

12-JK4-14

SKILLING, HELLE, CHRISTIANSEN, ROBERTSON — Structural & Civil Engineers

PROJECT: THE WORLD TRADE CENTER

TITLE: CONNECTION DETAIL FOR COL. [illegible] (EL. 332'-0")

DATE: 1-13-69

REVISIONS

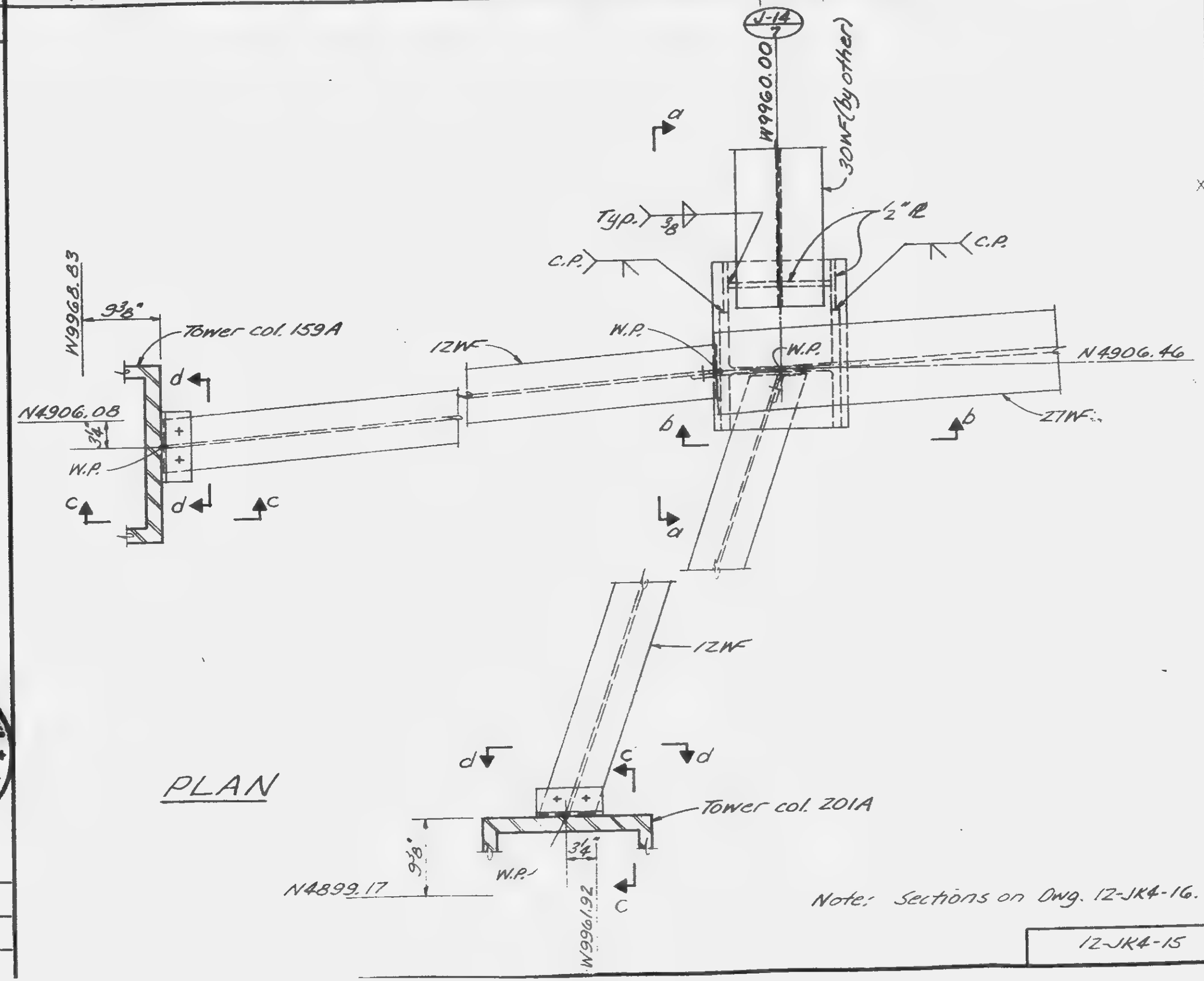

LICENSED PROFESSIONAL ENGINEER — LESLIE E. ROBERTSON — No. 34360 — STATE OF NEW YORK

DESIGNED

DRAWN: J Adams

CHECKED: R.T. & E.L.

12-JK4-15

SKILLING, HELLE, CHRISTIANSEN, ROBERTSON — Structural & Civil Engineers

PROJECT: THE WORLD TRADE CENTER | TITLE: CONNECTION DETAIL FOR COLUMN ~~44~~ 7 (EL 332'-0") | DATE: 1-13-69

REVISIONS

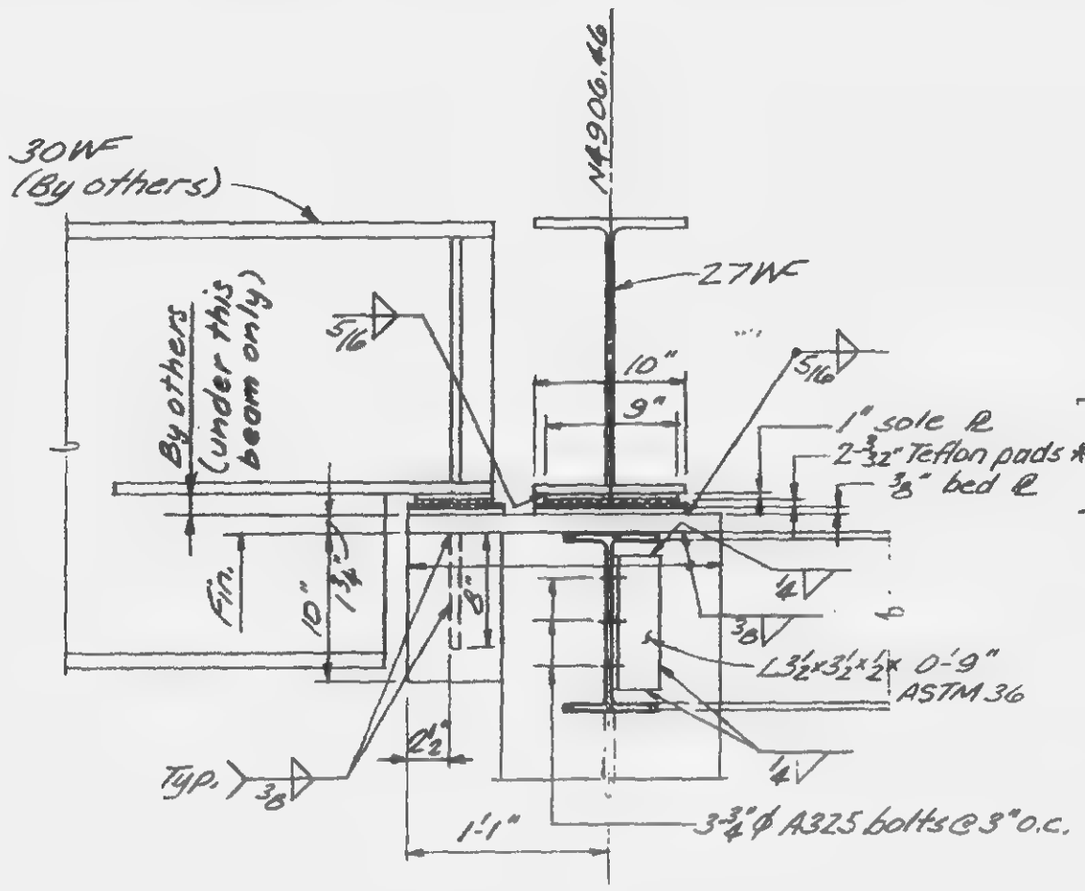

Section a-a

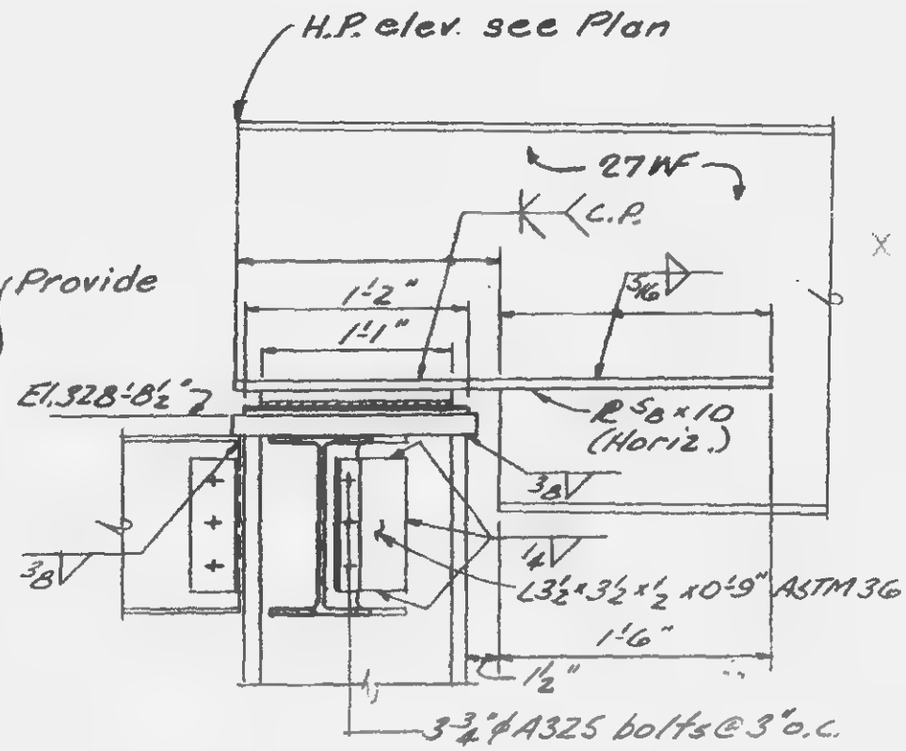

Section b-b

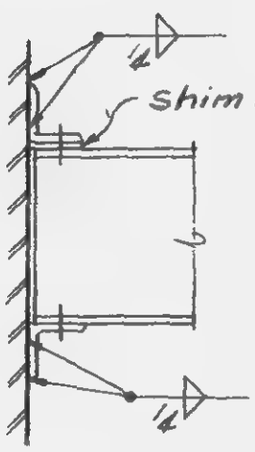

Section c-c

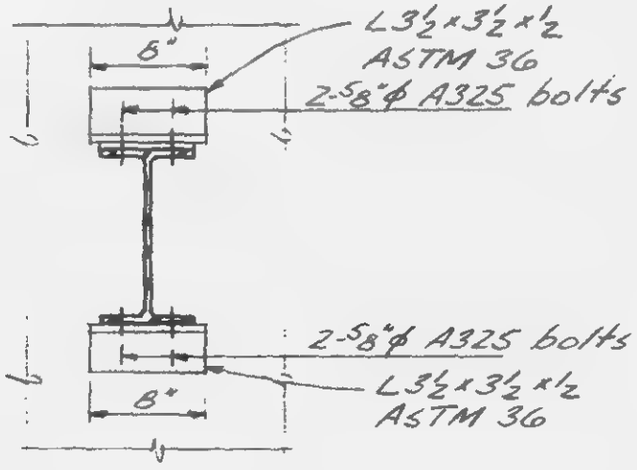

Section d-d

* Teflon pads have a bearing capacity of 2000 psi.

LICENSED PROFESSIONAL ENGINEER — LESLIE E. ROBERTSON — No. 34360 — STATE OF NEW YORK

DESIGNED
J. Adams
REVIEWED
R.T. & E.L.

12-JK4-16

SKILLING, HELLE, CHRISTIANSEN, ROBERTSON — Structural & Civil Engineers

PROJECT: THE WORLD TRADE CENTER | TITLE: BEAM CONNECTION DETAILS - El. 332' | DATE: 10-23-69

REVISIONS

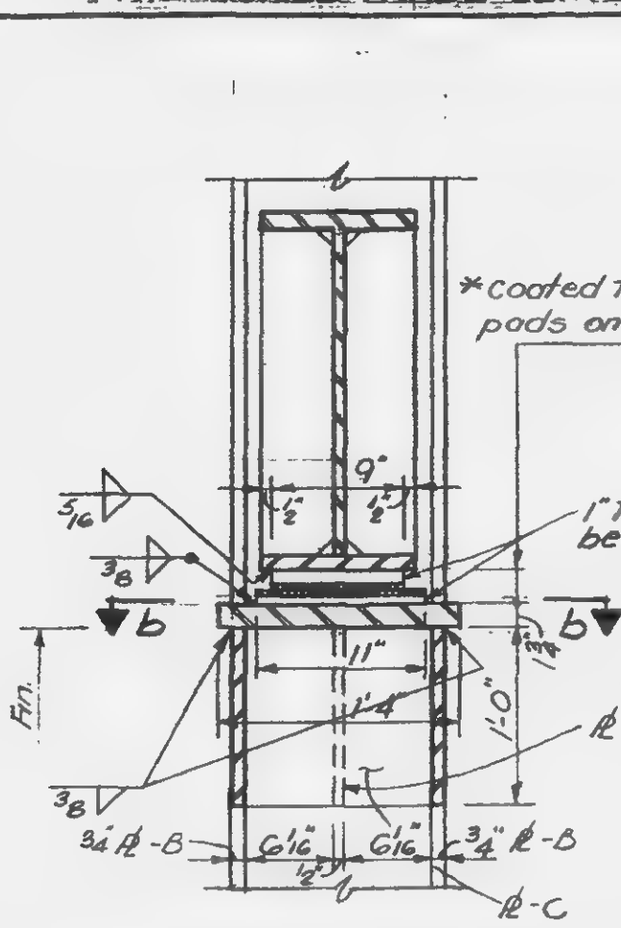

Section a-a

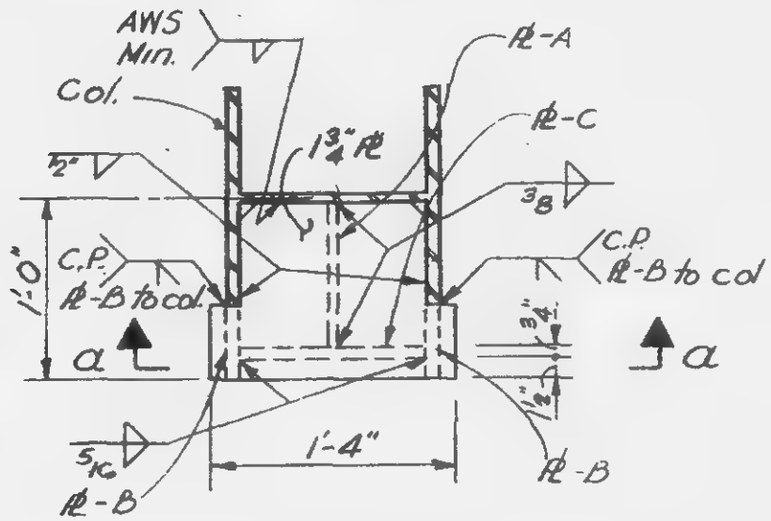

Section b-b

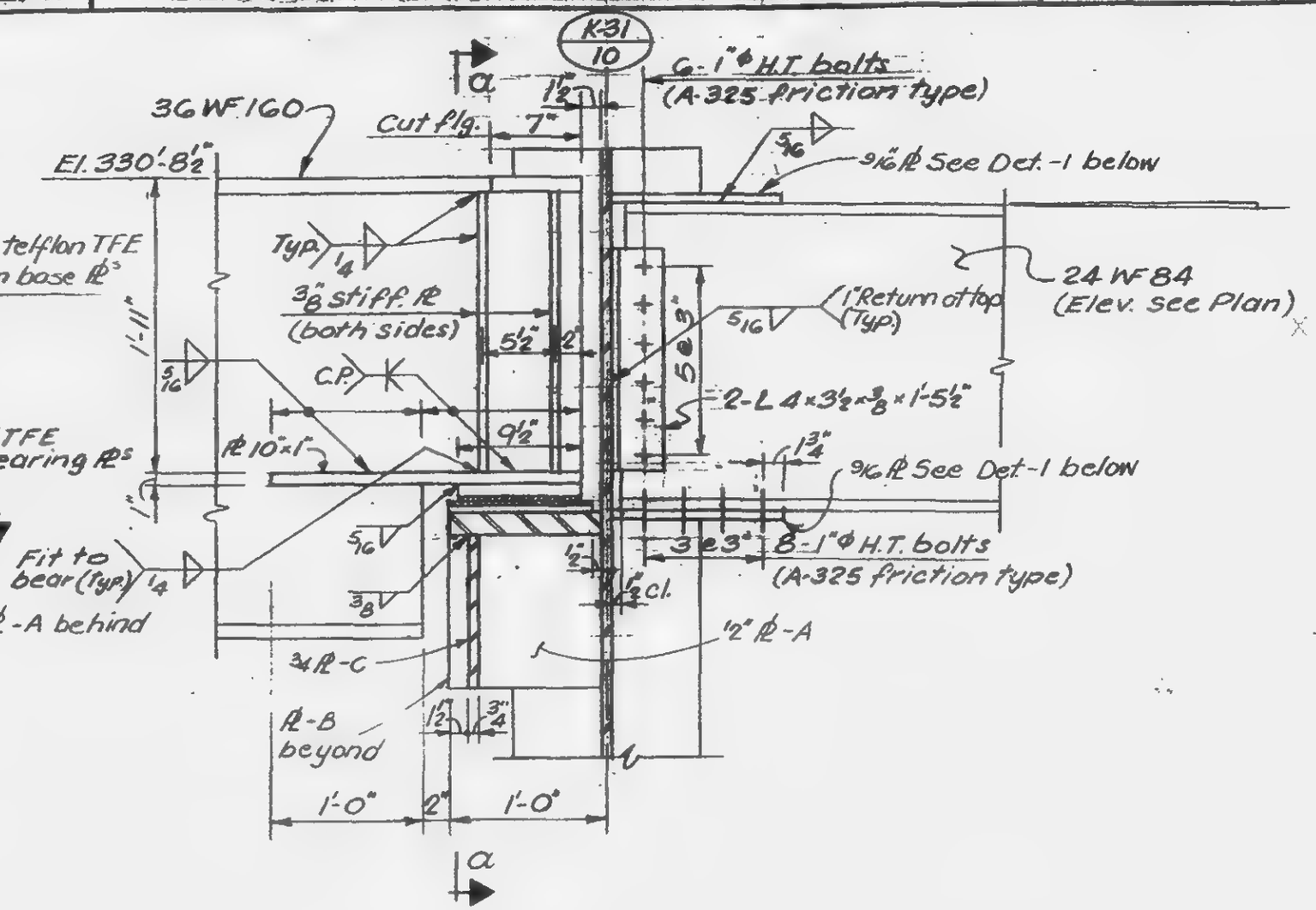

Elevation

*Lubritef pads to have a bearing capcity of 3000psi

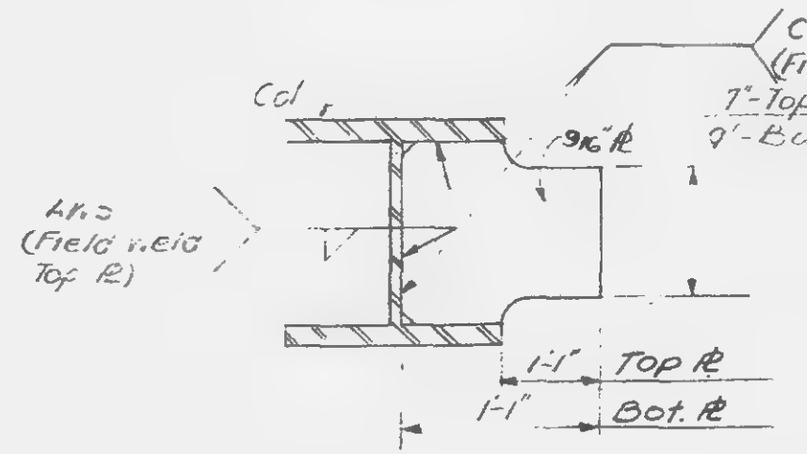

Detail -1

LICENSED PROFESSIONAL ENGINEER — LESLIE E. ROBERTSON — No. 34360 — UNIVERSITY OF THE STATE OF NEW YORK

DESIGNED

DRAWN S.C.

REVIEWED E.L.

12-JK4-17

SKILLING, HELLE, CHRISTIANSEN, ROBERTSON — Structural & Civil Engineers

PROJECT: THE WORLD TRADE CENTER | TITLE: CONNECTION DETAIL - EL 332' | DATE: 10-23-69

REVISIONS

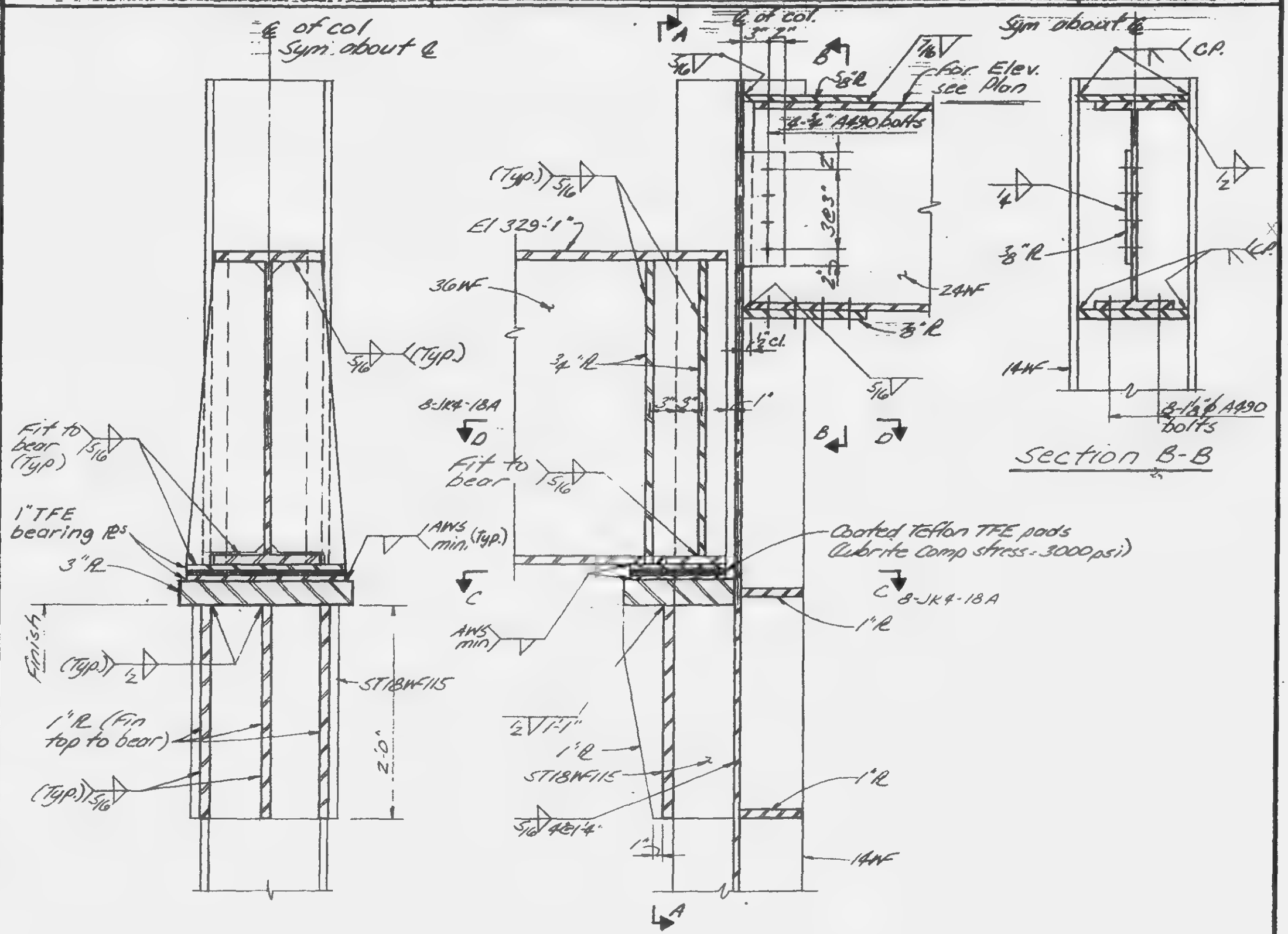

LICENSED PROFESSIONAL ENGINEER — LESLIE E. ROBERTSON — No. 34960 — UNIVERSITY OF THE STATE OF NEW YORK

DESIGNED

DRAWN: S.C.

REVIEWED: E.L.

12-JK4-18

SKILLING, HELLE, CHRISTIANSEN, ROBERTSON — Structural & Civil Engineers

PROJECT: THE WORLD TRADE CENTER | TITLE: CONNECTION DETAIL - EL 332' | DATE: 10-23-69

REVISIONS

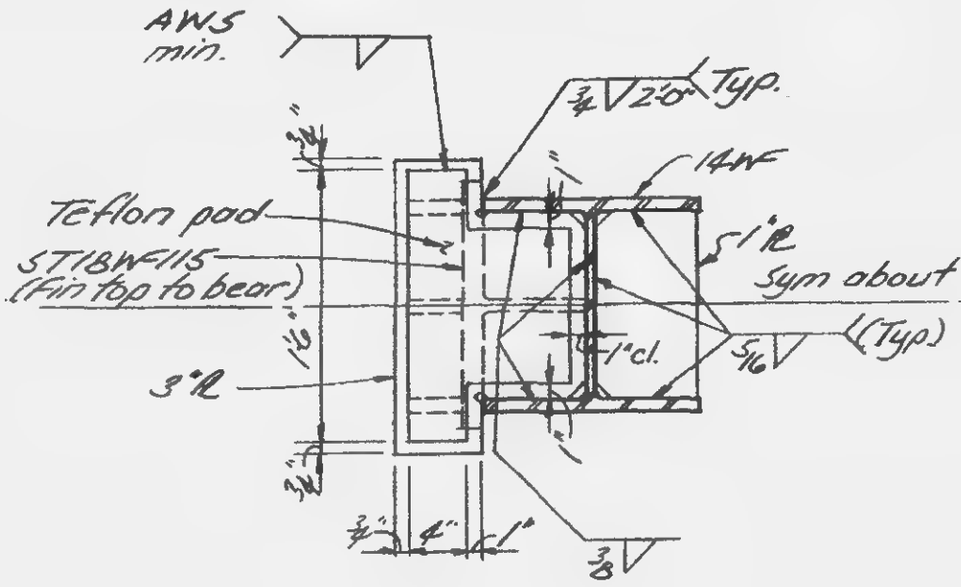

Section C-C

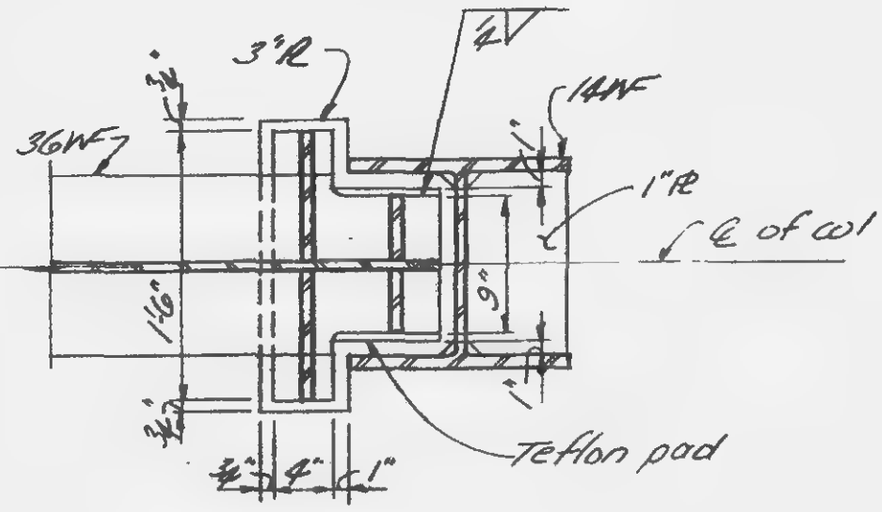

Section D-D

LICENSED PROFESSIONAL ENGINEER
LESLIE E. ROBERTSON
No. 34360
UNIVERSITY OF THE STATE OF NEW YORK

DESIGNED

DRAWN J.A.

REVIEWED E.L.

12-JK4-18A

SKILLING, HELLE, CHRISTIANSEN, ROBERTSON — Structural & Civil Engineers

PROJECT: THE WORLD TRADE CENTER | TITLE: CONNECTION DETAIL - EL 332' | DATE: 10-23-69

REVISIONS

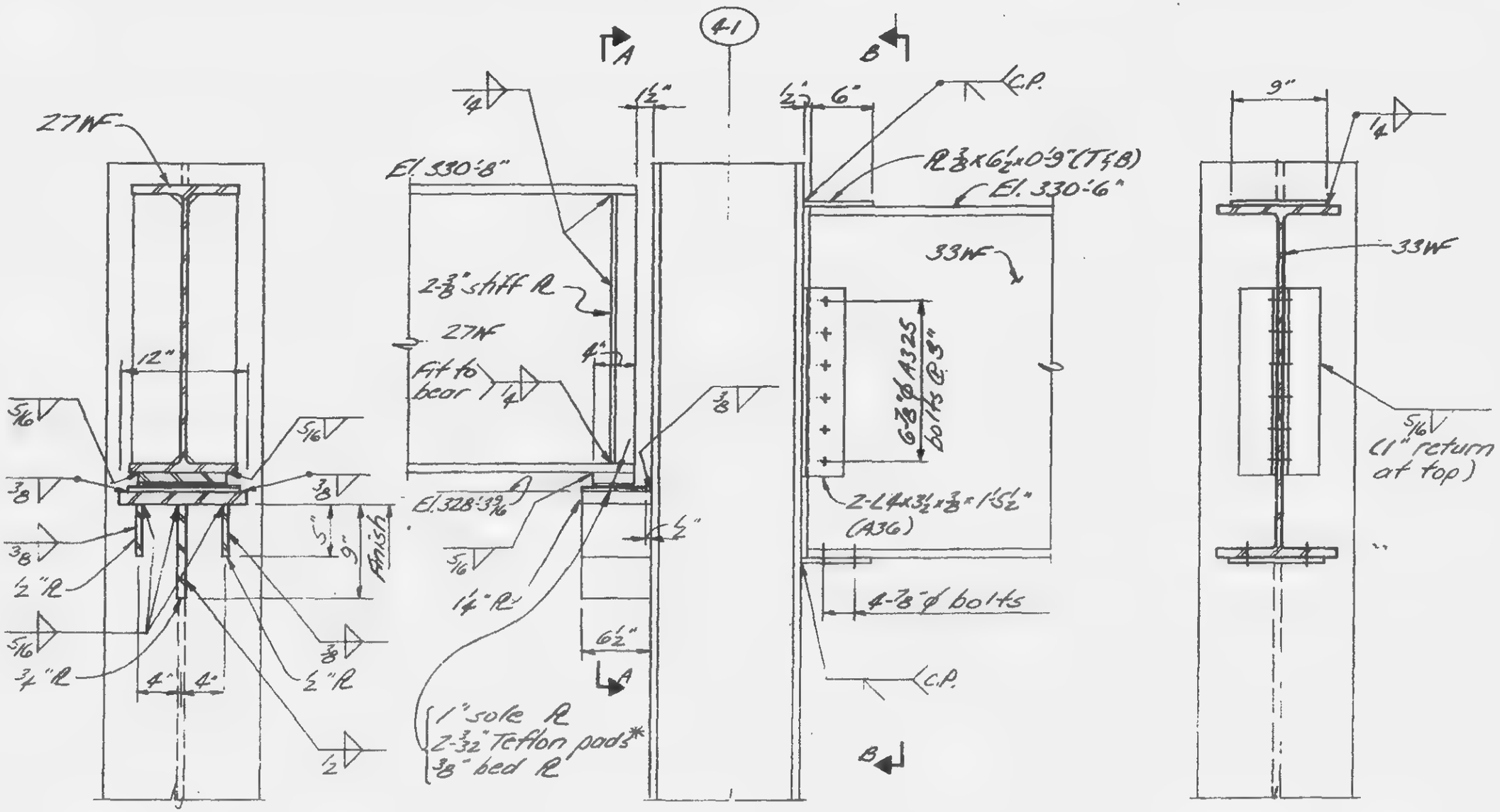

Section A-A

Elevation
(Beams framed to web not shown)

Section B-B

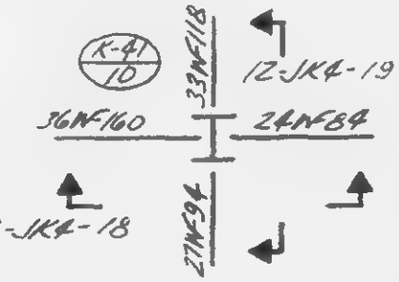

Key Plan

* The bearing capacity of Teflon pads to have 2000 psi

LICENSED PROFESSIONAL ENGINEER
LESLIE E. ROBERTSON
No. 34360
UNIVERSITY OF THE STATE OF NEW YORK

DESIGNED

DRAWN
J.A.

REVIEWED
E.L.

12-JK4-19

SKILLING, HELLE, CHRISTIANSEN, ROBERTSON — Structural & Civil Engineers

PROJECT THE WORLD TRADE CENTER | TITLE BEAM CONNECTION DETAILS - El. 332' | DATE 10-23-69

REVISIONS

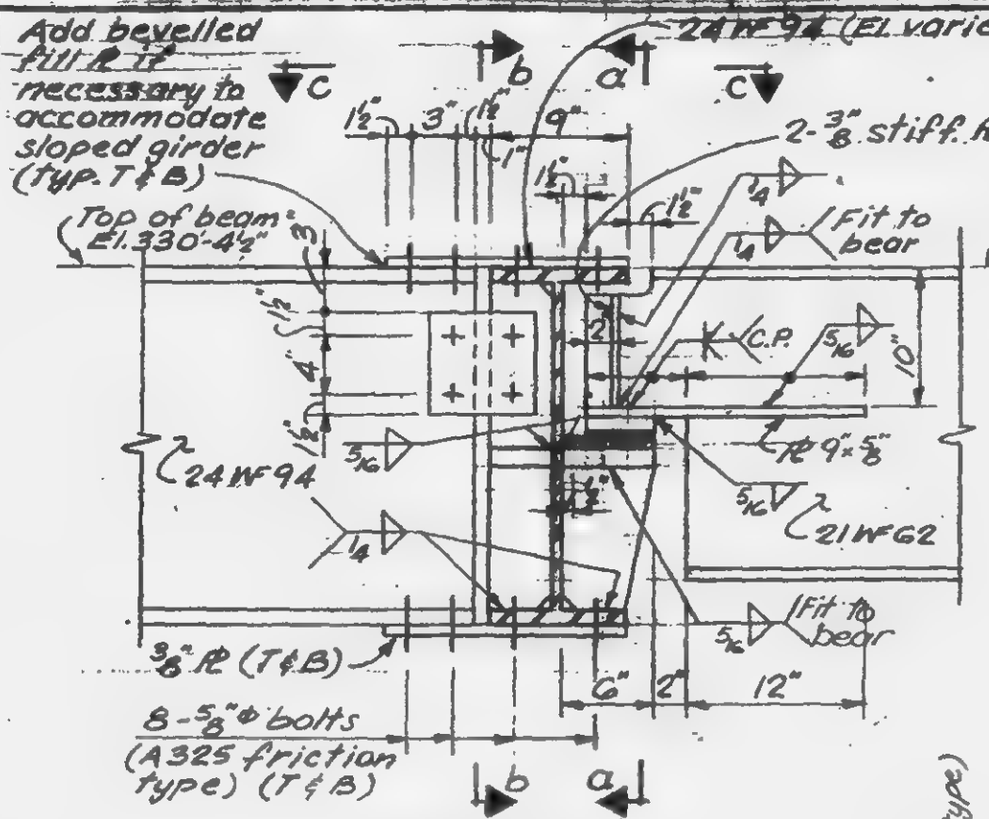

Detail - 1

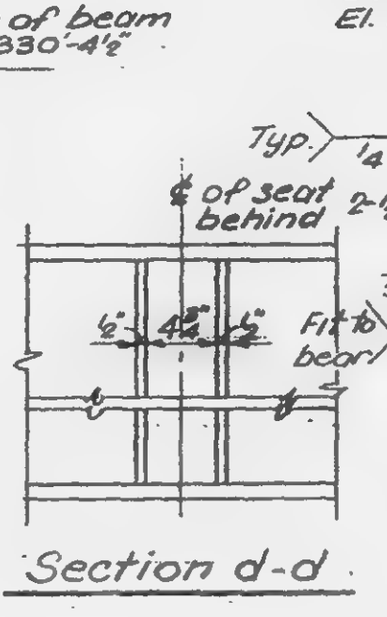

Section d-d

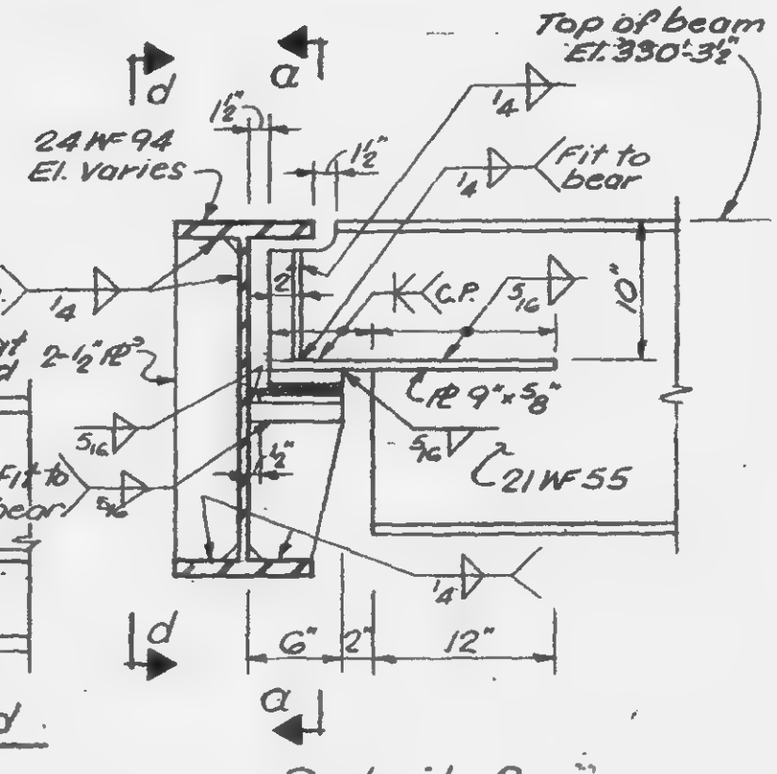

Detail - 2

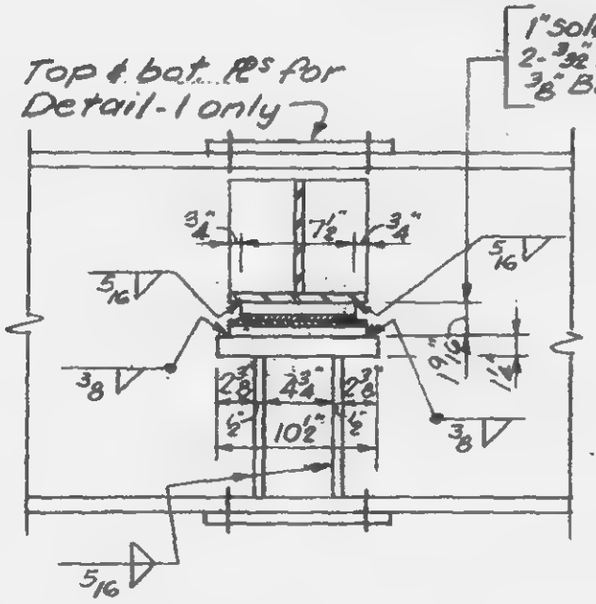

Section a-a

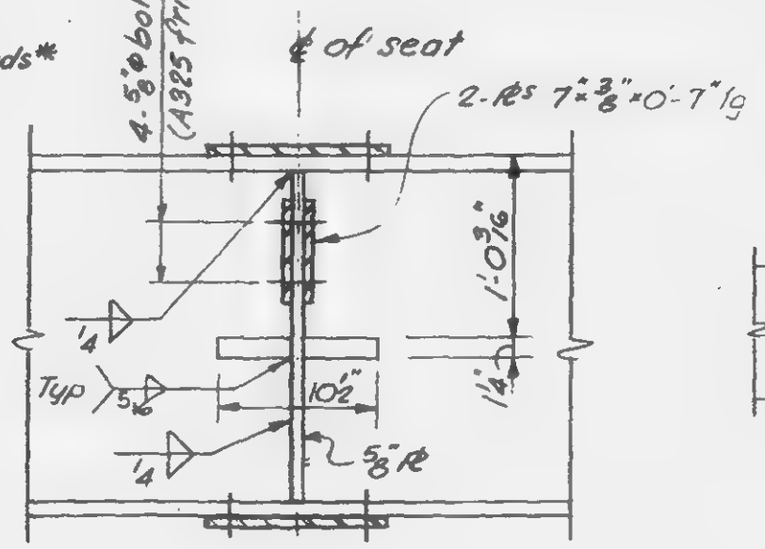

Section b-b

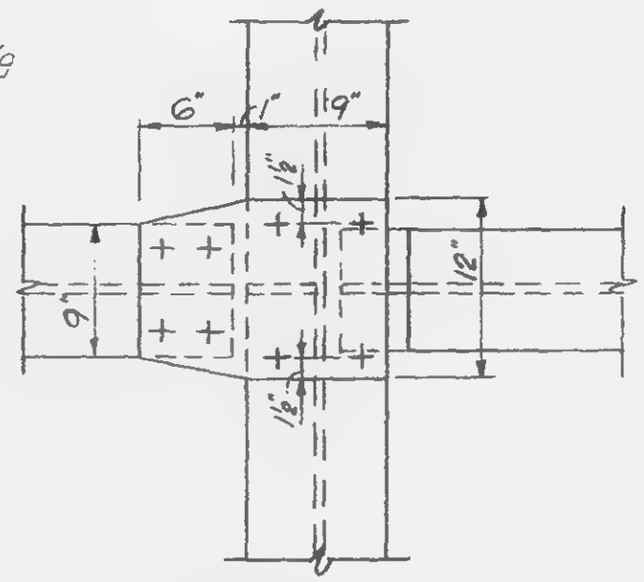

Section c-c

*Teflon pads to have a bearing capacity of 2000 psi

LICENSED PROFESSIONAL ENGINEER — LESLIE E. ROBERTSON — No. 34960 — UNIVERSITY OF THE STATE OF NEW YORK

DESIGNED

DRAWN S.C.

CHECKED E.L.

12-JK4-20

SKILLING, HELLE, CHRISTIANSEN, ROBERTSON — Structural & Civil Engineers

PROJECT THE WORLD TRADE CENTER | TITLE BEAM CONNECTION DETAIL - El. 332' | DATE 10-23-69

REVISIONS

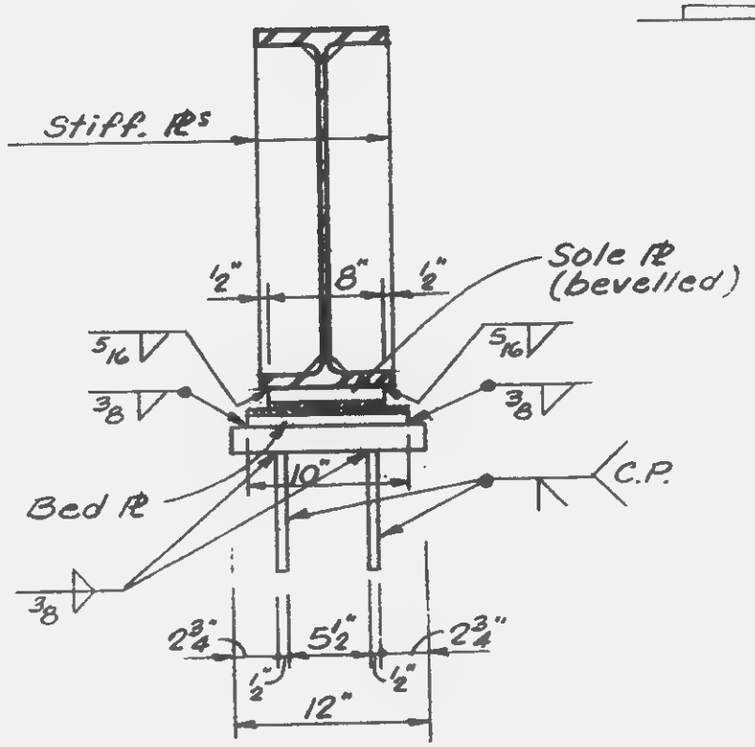

Section a-a

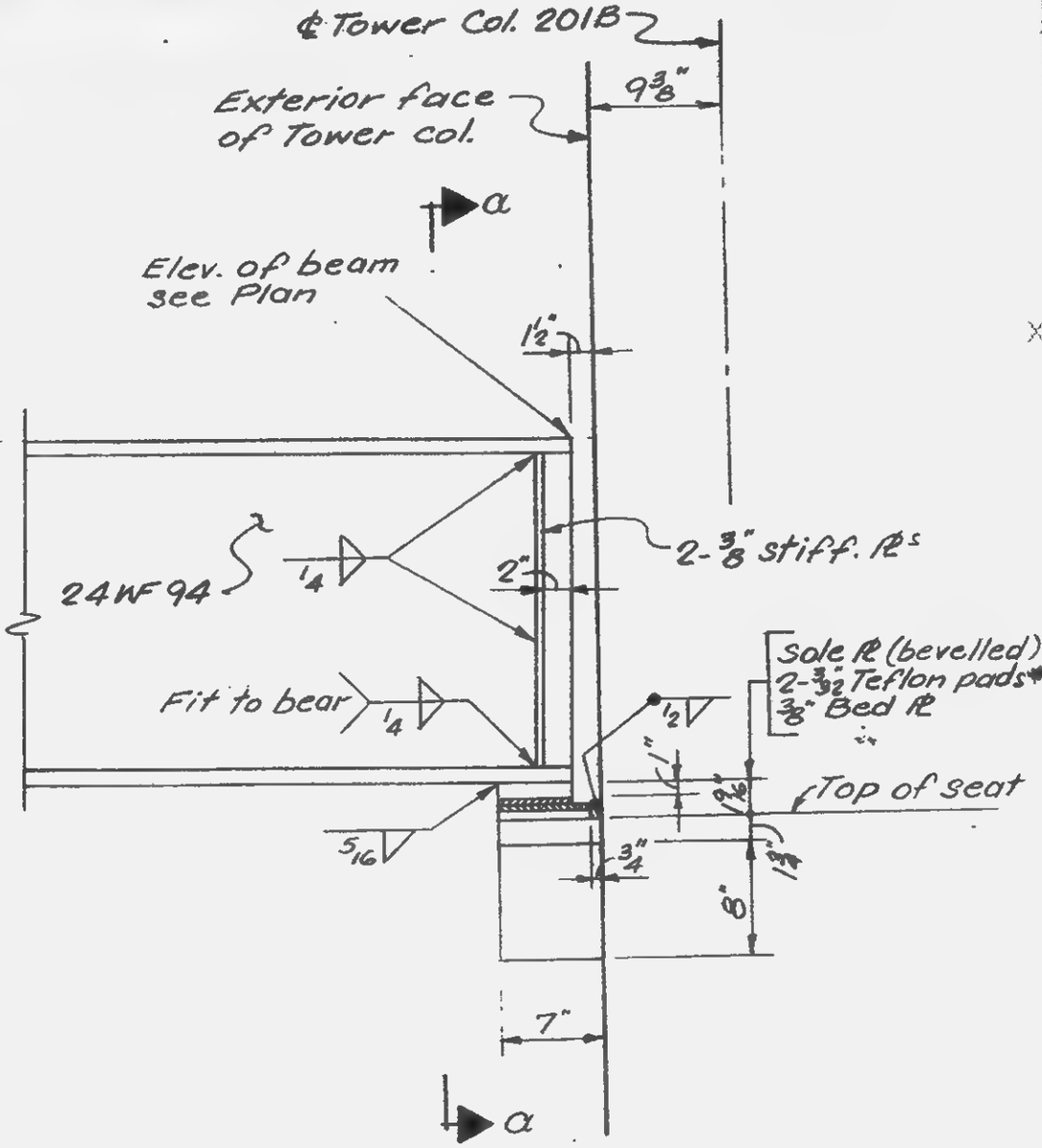

Elevation

* Teflon pads to have a bearing capacity of 2000 psi

LICENSED PROFESSIONAL ENGINEER — LESLIE E. ROBERTSON — No 34960 — UNIVERSITY OF THE STATE OF NEW YORK

DESIGNED

DRAWN S.C.

CHECKED E.L.

12-JK4-21

SKILLING, HELLE, CHRISTIANSEN, ROBERTSON — Structural & Civil Engineers

PROJECT THE WORLD TRADE CENTER | TITLE CONNECTION DETAIL - El. 332' | DATE 10-23-69

REVISIONS

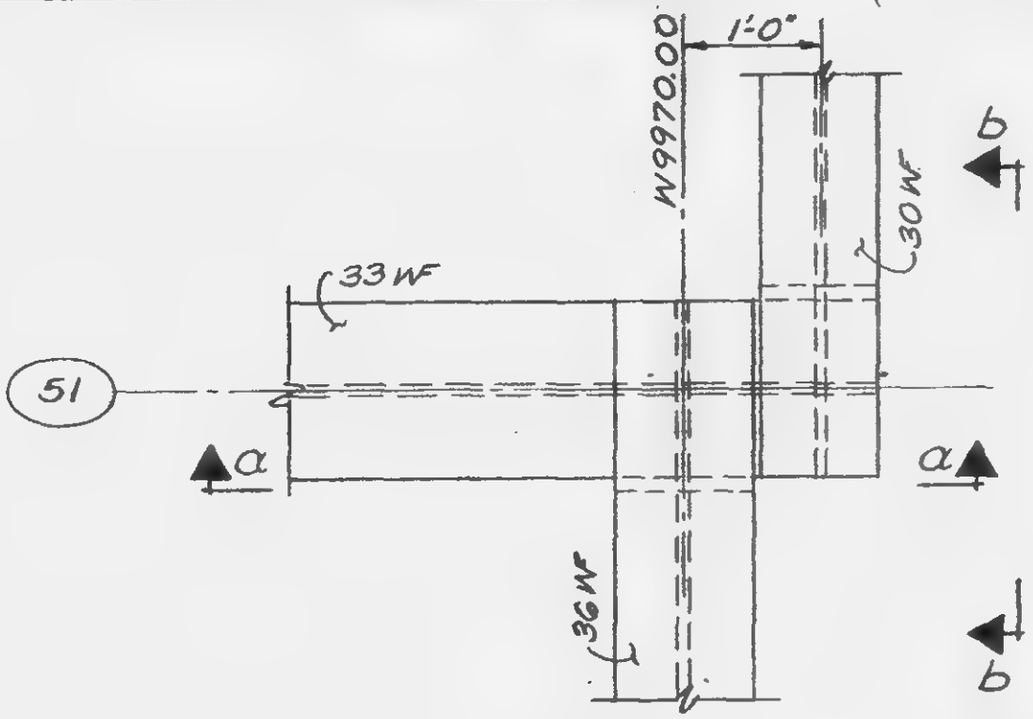

Plan

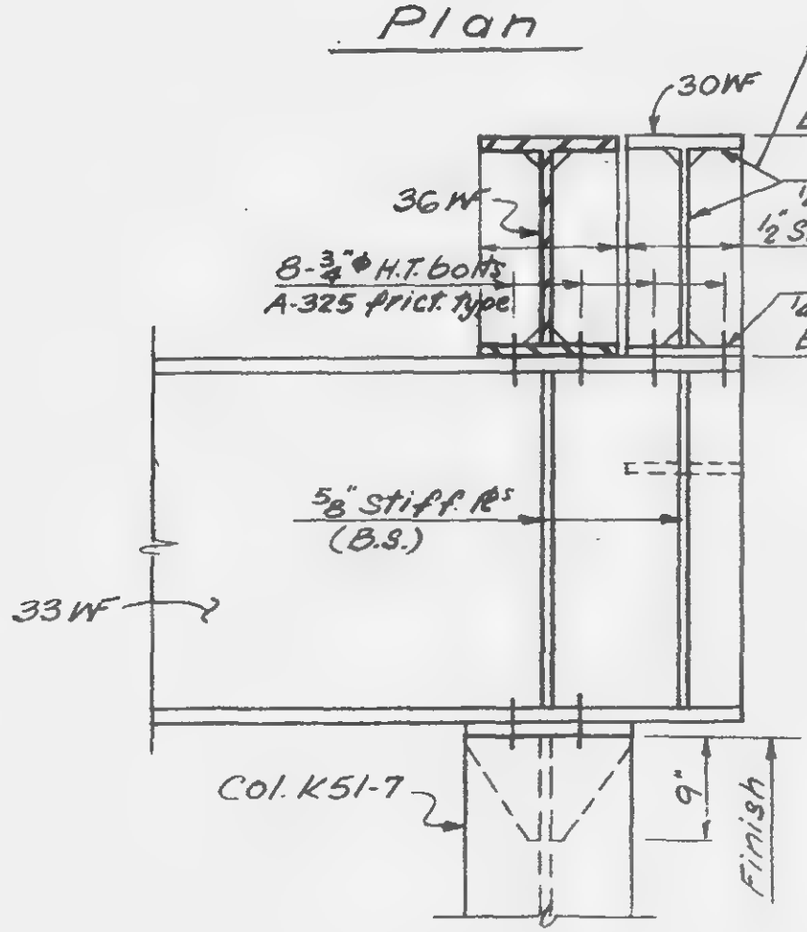

Section a-a

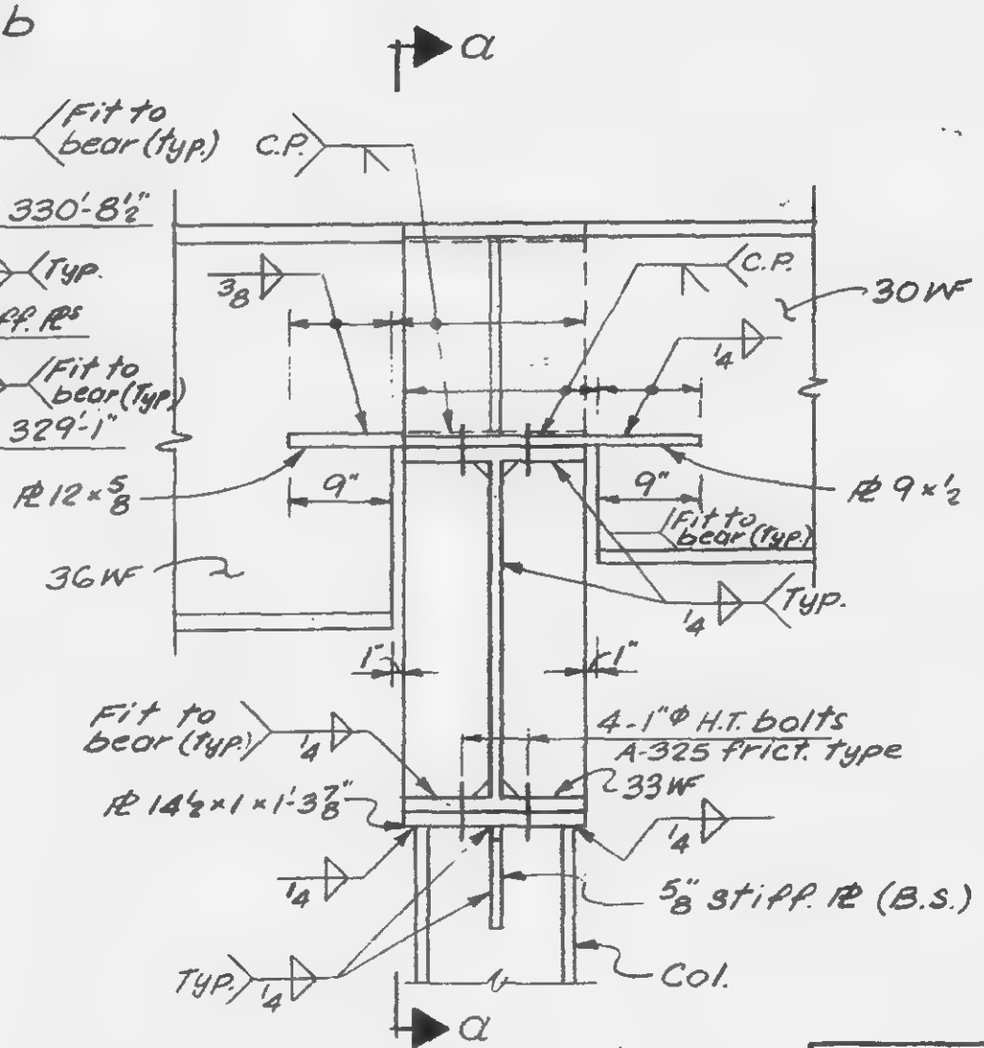

Section b-b

12-JK4-22

LICENSED PROFESSIONAL ENGINEER — LESLIE E. ROBERTSON — No. 34360 — UNIVERSITY OF THE STATE OF NEW YORK

DESIGNED

S.C.

REVIEWED

E.L.

SKILLING, HELLE, CHRISTIANSEN, ROBERTSON — Structural & Civil Engineers

PROJECT: THE WORLD TRADE CENTER | TITLE: BEAM CONNECTIONS TO SLURRY WALL - NOTES | DATE: 3-19-69

REVISIONS

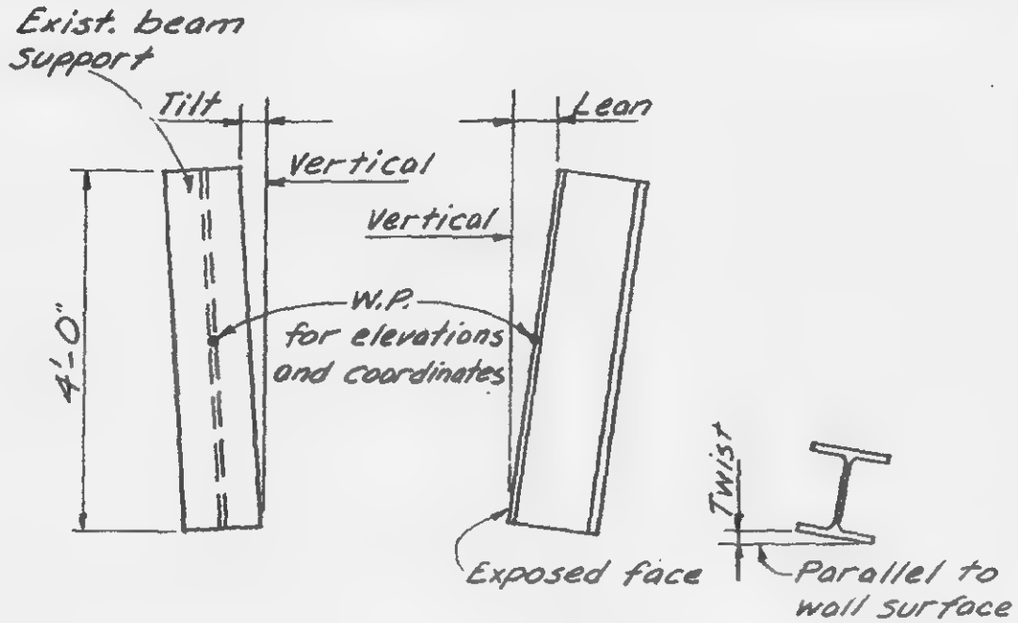

Front view (Looking toward wall) | Side view | Plan

BEAM SUPPORT DEVIATIONS

1. For beam support (12WF53) see PNYA Dwg F-J-6.
2. Deviations shown are positive; negative deviations are in opposite direction.
3. Deviations are scheduled on dwgs. 12-JK5-2 & -3.

NOTES

1. Beam support data scheduled on dwgs. 12-JK5-2 & 12-JK5-3 are taken from survey made by PONYA completed on 2-5-69. Elevations and coordinates are given to center of exposed flange at mid-height.
2. All structural steel to be Fy 36.
3. Welding electrodes to be E70xx.
4. Shipping and erection bolts to be 5/8" ϕ hor unfinished machine bolts. Provide hor. slotted holes in beams and/or detail material to allow a tolerance of beam support location of ± 1/2".
5. Cut away concrete as necessary to insure workmanlike installation of connections and grout space between connection ℄ & wall with Embeco.
6. "Cinch Anchors" shown on detail 'A' shall be 4 units 4 units Threaded Ring wedge Cinch Anchors (Type 2) with 1 1/2" ϕ bolts as manufactured by National Lead Company
7. Should reinforcing bars be encountered when drilling for cinch anchors, move plate B by not more than 2" to miss bars.
8. Where beam is not at a right angle to plate B, bend outstanding legs of angles A to lie flat against plate B.

LICENSED PROFESSIONAL ENGINEER — LESLIE E. ROBERTSON — No. 34360 — UNIVERSITY OF THE STATE OF NEW YORK

J.H.

DRAWN: A.L. FRANQUI

REVIEWED: E.L.

12-JK5-1

SKILLING, HELLE, CHRISTIANSEN, ROBERTSON — Structural & Civil Engineers

PROJECT: THE WORLD TRADE CENTER | TITLE: BEAM CONNECTIONS TO SLURRY WALL-SCHEDULE I | DATE: 3-19-69

REVISIONS
3-31-69
4-18-69
5-29-69

FIELD CONNECTION DATA

Conn Det.	Steel Beam Plan	Size	Elev.	Coord.	Detail Material Angle A	A B	Weld C	Weld D	Dim E
A1	SJ-45	24WF160	262'-9"	N4868±	2 L 5 x 3 x 3/8 x 1'-4"	18 x 3/4	5/16	-	4
A2		18WF85	262'-9"	N4862±	2 L 5 x 3 x 3/8 x 0'-10"	18 x 3/4		-	4
A3		18WF85	262'-9"	N4857±		18 x 3/4		-	4
A4		18WF85	262'-9"	N4820±		18 x 3/4		-	4
A5		18WF85	262'-9"	N4815±	2 L 5 x 3 x 3/8 x 0'-10"	18 x 3/4		-	4
A6	SJ-45	24WF160	262'-9"	N4809±	2 L 5 x 3 x 3/8 x 1'-4"	18 x 3/4	5/16	-	4
B1	SK-50	30x261	262'-9"	W9895.00	2 L 5 x 3 x 3/4 x 2'-0"	20 x 1 1/2	5/8	3/4	3
C1	SK-51	31x261	262'-9"	W9867.50	2 L 5 x 5 x 5/8 x 2'-0" *	38 x 3/4	1/2	5/8	1/2
D1	SJ-75	24WF76	289'-5"	W9974.50	2 L 5 x 3 x 7/16 x 1'-4"	-	3/8	-	4
D2		21WF55	289'-5"	W9960.00	2 L 5 x 3 x 7/16 x 1'-2"	-	3/8	-	3 1/2
D3		21WF55	289'-5"	W9952.75	2 L 5 x 3 x 7/16 x 1'-2"	-	3/8	-	3 1/2
E1		30WF99	289'-5"	W9940.00	L 5 x 5 x 7/16 x 2'-0"	-	3/8	-	3
E2		30WF99	289'-5"	W9900.00	L 5 x 5 x 7/16 x 2'-0"	-	3/8	-	3
H		27WF94	288'-1"	W9870.00	2 L 5 x 3 x 7/16 x 1'-10"	-	-	-	-
F1		16WF40	288'-1"	W9863.33	See 12-JK5-9				
F2		21WF55	289'-7 1/2"	W9855.67	See 12-JK5-9				
D5		16B31	289'-5"	N5194.00	2 L 5 x 3 x 7/16 x 1'-0"	-	3/8	-	2
D6		16B31	289'-5"	N5186.00	2 L 5 x 3 x 7/16 x 1'-0"	-	3/8	-	2
D7		14B22	289'-5"	N5177.50	2 L 5 x 3 x 7/16 x 0'-9"	-	3/8	-	2 1/2
C2		33WF152	288'-6"	N5147.50	2 L 5 x 3 x 7/16 x 2'-2"	28 x 3/4	3/8	5/8	1/2
C3		33WF152	288'-6"	N5117.50	2 L 5 x 3 x 7/16 x 2'-2"	28 x 3/4	3/8	5/8	1/2
C4		33WF152	288'-6"	N5087.50	2 L 5 x 3 x 7/16 x 2'-2"	26 x 7/8	3/8	3/8	1/2
C5	SJ-75	33WF240	288'-6"	N5057.50	2 L 5 x 5 x 5/8 x 2'-0" *	28 x 1 1/8	1/2	5/8	1/2

BEAM SUPPORT DATA

PNYA Desig.	Coordinates North	Coordinates West	Center Elev.	Deviations (in.) Tilt	Lean	Twist
GX1	4867.85	9796.34				
GX2	4861.05	9794.87				
GX3	4857.17	9793.97				
GX4	4819.67	9784.84				
GX5	4815.85	9783.78				
GX6	4809.30	9781.54				
L13E	4256.93	9895.64	260.98	0.06	0.12	0.20
L13W	4257.14	9899.61	260.87	0.16	0.08	0
L12E	4256.31	9866.50	261.12	0.06	0	0
L12W	4256.38	9870.63	261.10	0.10	0.06	0
V21	5202.60	9974.48	288.06	0	0.06	0
V22W	5201.78	9960.05	288.50	0	0	0
V22E	5201.27	9952.70	288.52	0	0.08	0
V23	5200.49	9940.38	288.46	0	0.08	0
V25	5199.31	9900.47	287.38	-0.12	0.10	0
V26	5197.95	9870.90	287.17	0.06	0.04	0
G1N	5194.01	9840.62	287.88	-0.22	0.08	0
G1S	5185.84	9840.52	287.84	0.44	-0.06	0
G2	5177.48	9840.32	287.86	-0.12	0.06	0
G3N(Top)	5150.83	9840.74	287.78	-0.08	0.06	0
G3S(Top)	5146.88	9840.77	287.86	0	0	0
G4S(Top)	5121.50	9840.77	288.12	0.16	0.04	0
G5	5116.80	9840.78	288.08	-0.12	0	0
G6N	5082.63	9840.47	287.49	0.04	0	0
G6S	5085.63	9840.40	288.10	0	0.04	0.20
G7	5060.72	9840.54	287.96	0.14	-0.10	0
G8	5054.94	9839.37	288.05	-0.30	0	0

1. * — Slot Ls per 12-JK5-6
2. See notes on 12-JK5-1
3. See details on 12-JK5-4 thru 11.

LICENSED PROFESSIONAL ENGINEER — LESLIE E. ROBERTSON — No. 34260 — UNIVERSITY OF THE STATE OF NEW YORK

DESIGNED J.H.
DRAWN L. FRANQUI
REVIEWED E.L.

12-JK5-2

SKILLING, HELLE, CHRISTIANSEN, ROBERTSON — Structural & Civil Engineers

PROJECT: THE WORLD TRADE CENTER | TITLE: BEAM CONNECTIONS TO SLURRY WALL-SCHEDULE II | DATE: 9-19-69

REVISIONS
5-29-69
11-3-69
12-11-69

FIELD CONNECTION DATA										BEAM SUPPORT DATA						
Conn Det.	Steel Beam Plan	Size	Elev.	Coord.	Detail Material Angle A	PL B	Weld C	Weld D	Dim E	PNYA Desig.	Coordinates North	West	Center Elev.	Deviations (in.) Tilt	Lean	Twist
G1	SJ-76	33WF118	289'-3"	N5027.50	See 12-JK5-10					G9N(Top)	5028.91	9833.41	287.71	0.06	0.16	0
		33WF118	289'-3"	N5023.50	See 12-JK5-10					G9S(Top)	5025.01	9832.51	287.82	0.12	0.04	0
C6	SJ-77	30WF210 +2PL20x1	289'-10"	N4868±	2 L 5x5x⅝x2'-0*	40x¾	9/16	11/16	½	G16	4870.70	9797.05	To be determined in Field			
										G17	4867.02	9796.31				
D16		27WF177 +1PL16½x¼	289'-5"	N4848±	2 L 5x3½x⅝x2'-0		½		2	GX10	4848.03	9792.18				
D17		27WF177 +1PL16½x¼	289'-5"	N4828±	2 L 5x3½x⅝x2'-0		½		2	GX11	4828.46	9787.63				
C7		30WF210 +2PL12x1	289'-10"	N4809±	2 L 5x3x⅝x2'-0	30x¾	9/16	½	½	G19	4810.28	9782.29				
										G20	4807.51	9781.14				
C8	SJ-77	24WF160 +2PL20x¼	289'-5"	N4780±	2 L 5x5x⅝x1'-6*	30x⅝	½	½	½	G21N	4782.59	9772.92	288.27	0	0.18	0
										G21S	4778.76	9771.72	288.37	-0.16	0.10	0
C9	SK-78	24WF160 +2PL20x¼	289'-5"	N4752±	2 L 5x5x⅝x1'-6*	30x¾	½	½	½	G22(Top)	4753.48	9763.82	287.87	0	0	0
										G23(Top)	4748.31	9761.86	288.26	0	0.06	0
C10		24WF160 +2PL20x1¼	289'-5"	N4724±	2 L 5x5x⅝x1'-6*	24x1¼	½	½	½	G24N(Top)	4725.91	9754.29	288.19	-0.34	0.04	0
										G24S(Top)	4721.90	9753.03	288.27	0.04	0.08	0
C11		24WF160 +2PL20x1¾	289'-5"	N4696±	2 L 5x5x⅝x1'-6*	24x1¼	½	½	½	G25N	4698.17	9745.11	288.32	-0.10	-0.12	0
										G25S	4694.36	9743.91	288.24	-0.12	-0.14	0
C12		24WF160 +2PL20x1¾	289'-5"	N4667±	2 L 5x5x⅝x1'-6*	30x¾	½	½	½	G27N	4668.35	9735.98	288.29	0.06	0	-0.30
										G27S	4664.24	9734.74	288.35	0.04	0	0
C13		24WF160 +2PL20x1¾	289'-5"	N4638±	2 L 5x5x⅝x1'-6*	30x¾	½	5/8	½	G28N	4641.21	9726.77	288.22	0	0	0
										G28S	4637.51	9725.43	288.40	0	0	0
C14		24WF160 +2PL20x1¾	289'-5"	N4610±	2 L 5x5x⅝x1'-6*	24x1¼	½	½	½	G30N	4612.21	9717.30	287.66	0	0	0
										G30S	4608.49	9715.98	287.86	-0.04	-0.06	0
C15	SK-78	24WF160 +2PL20x1¾	289'-5"	N4582±	2 L 5x5x⅝x1'-6*	30x¾	½	5/8	½	G31N	4582.28	9707.30	288.43	0.16	0.04	0
										G31S	4578.37	9706.16	288.52	0.24	0.08	0
B2	SK-88	36WF230 +2PL20x1¾	293'-8"	N4569.67	2 L 5x3x7/16x2'-0	20x2	3/8	9/16	3	G32N	4568.08	9702.66	292.05	-0.06	0.04	0
										G32S	4564.03	9701.46	292.07	-0.04	0.04	0

1. * — Slot Ls per 12-JK5-6
2. See notes on 12-JK5-1
3. See details on 12-JK5-4 thru 11.

LICENSED PROFESSIONAL ENGINEER — LESLIE E. ROBERTSON — No. 34260 — UNIVERSITY OF THE STATE OF NEW YORK

DESIGNED J.H.
DRAWN A.L.FRANQUI
REVIEWED E.I.

12-JK5-3

SKILLING, HELLE, CHRISTIANSEN, ROBERTSON — Structural & Civil Engineers

PROJECT: THE WORLD TRADE CENTER | TITLE: BEAM CONNECTIONS TO SLURRY WALL-DETAIL A | DATE: 3-19-69

REVISIONS

5-29-69

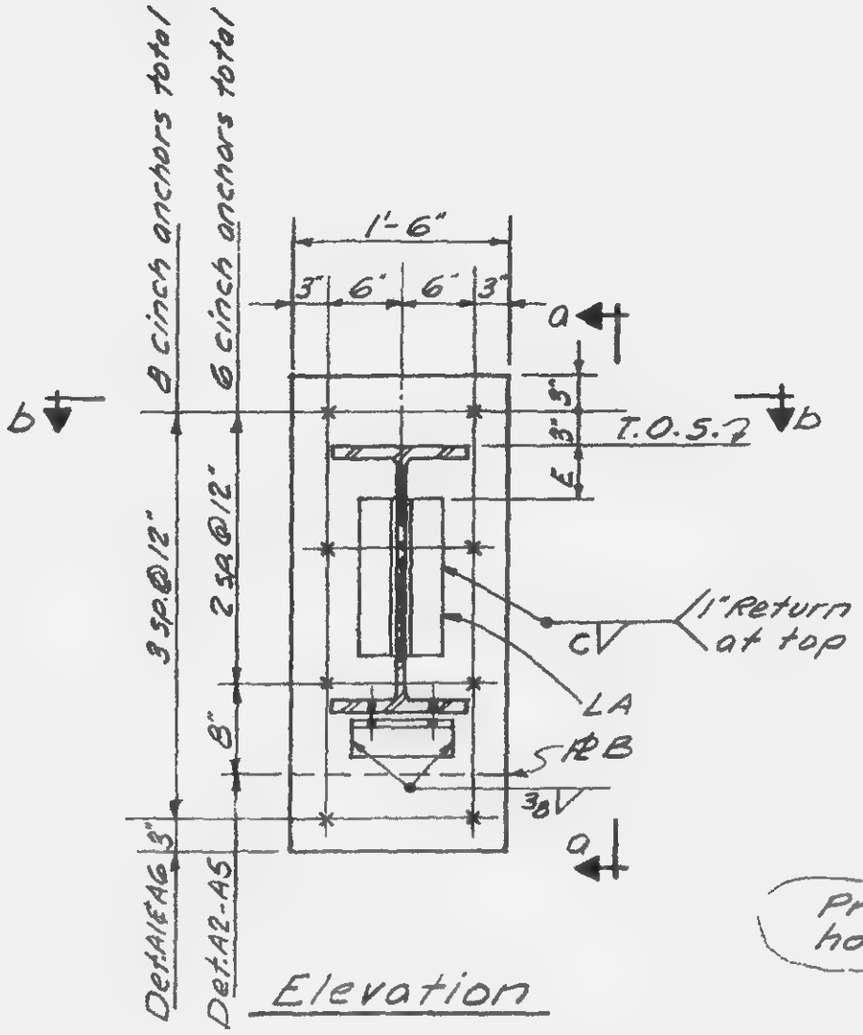

Elevation

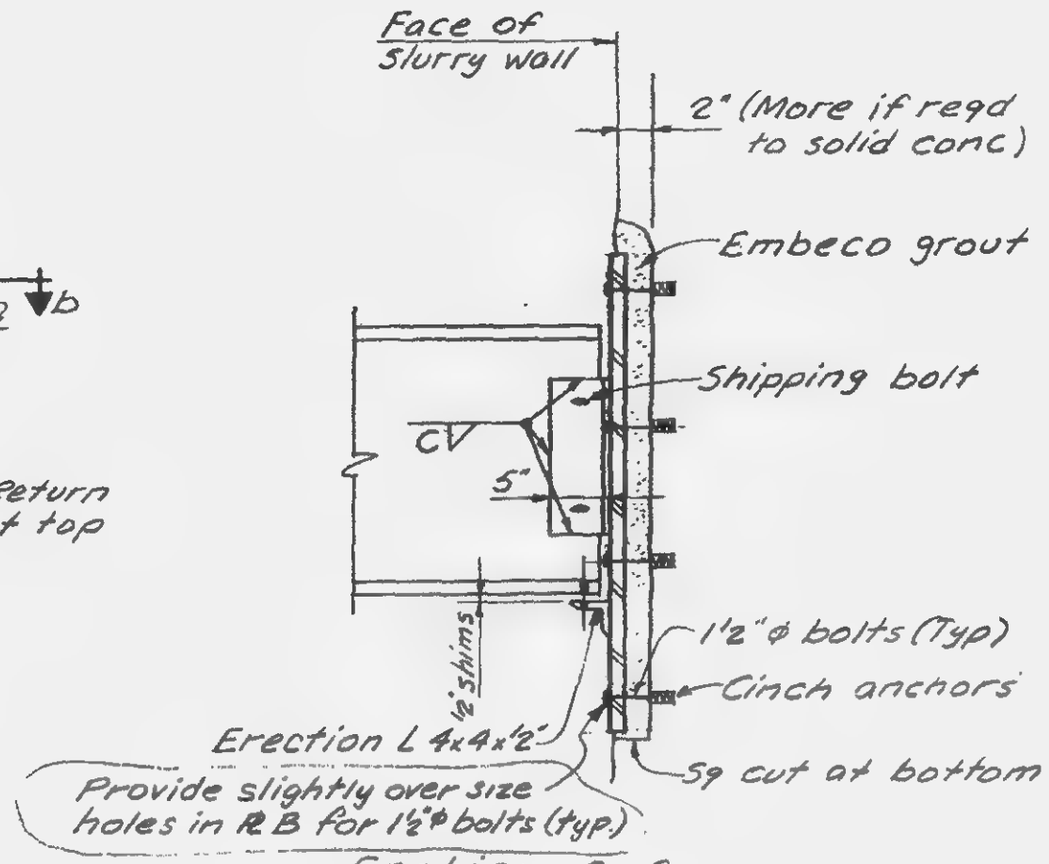

Section a-a

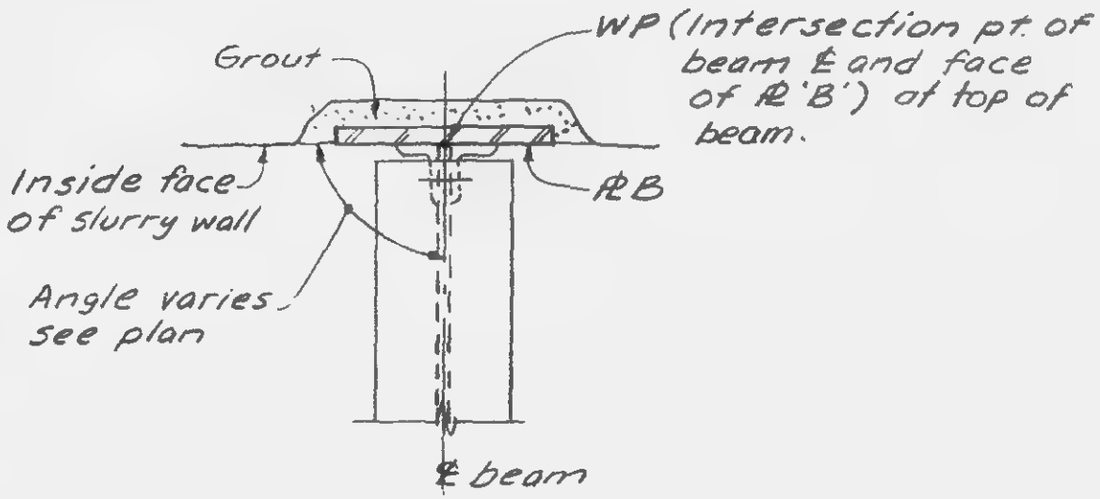

Section b-b

Notes:
1. See notes on 12-JK5-1

LICENSED PROFESSIONAL ENGINEER
LESLIE E. ROBERTSON
No. 34360
UNIVERSITY OF THE STATE OF NEW YORK

DESIGNED J.H.

DRAWN A.L. FRANQUI

REVIEWED E.L.

12-JK5-4

SKILLING, HELLE, CHRISTIANSEN, ROBERTSON — Structural & Civil Engineers

PROJECT: THE WORLD TRADE CENTER | TITLE: BEAM CONNECTIONS TO SLURRY WALL-DETAIL B | DATE: 3-19-69

REVISIONS

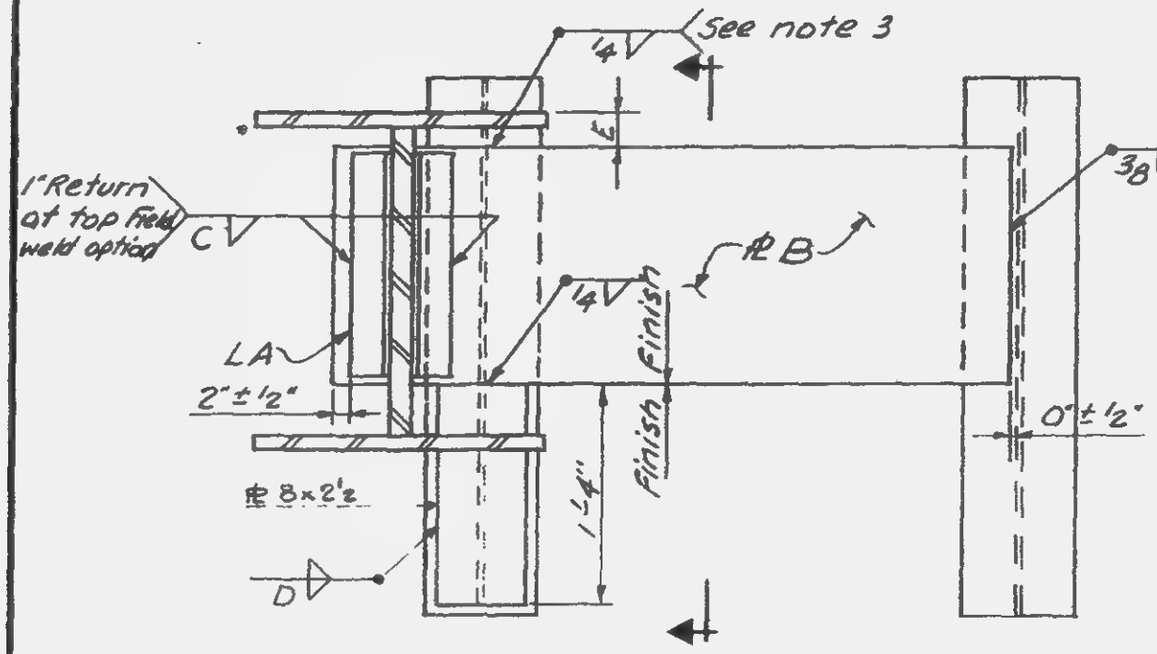

Elevation

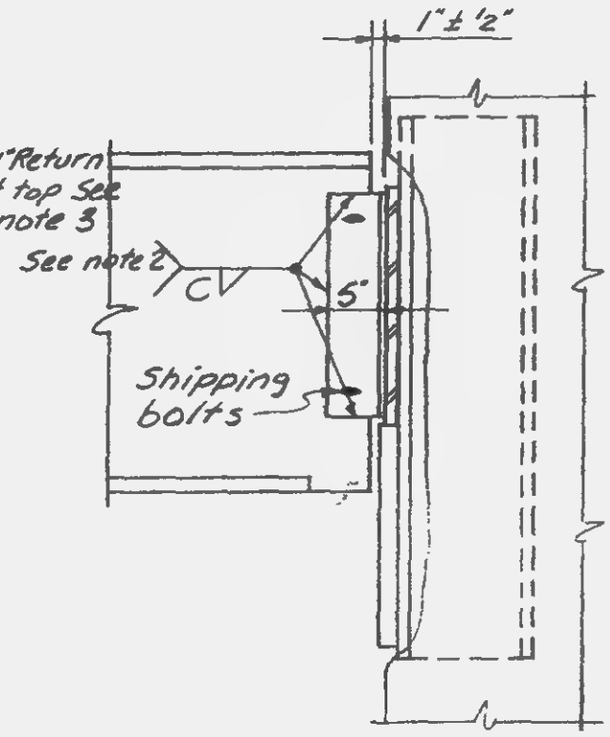

Section

Notes:

1. See notes on 12-JK5-1
2. If erection clearance is allowed between beam web & connection angles, size of weld has to be increased by the dimension of this gap. (Max clearance = 1/8")
3. Due to the deviation of exist. beam supports, the weld size shown has to be increased by the dimension of the gap between ℄ and sup't. In no case should this gap be greater than 1/8".

LICENSED PROFESSIONAL ENGINEER — LESLIE E. ROBERTSON — No. 34360 — UNIVERSITY OF THE STATE OF NEW YORK

DESIGNED: J.H.
DRAWN: A L. FRANQUI
REVIEWED: E.L.

12-JK5-5

SKILLING, HELLE, CHRISTIANSEN, ROBERTSON — Structural & Civil Engineers

PROJECT THE WORLD TRADE CENTER | TITLE BEAM CONNECTIONS TO SLURRY WALL-DETAIL C | DATE 3-19-69

REVISIONS

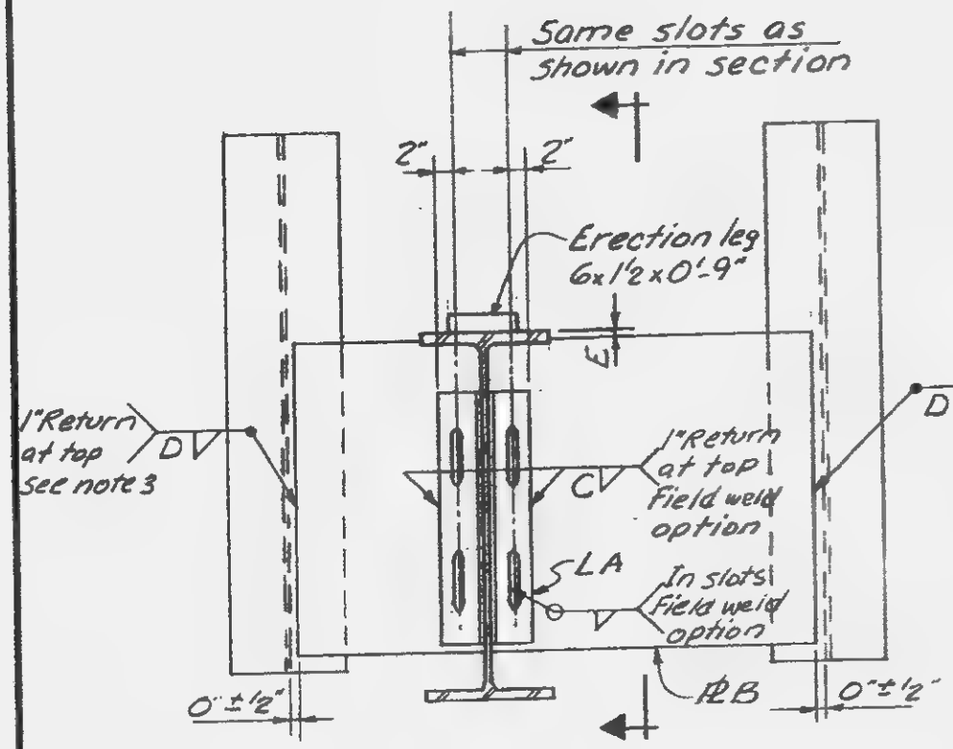

Elevation

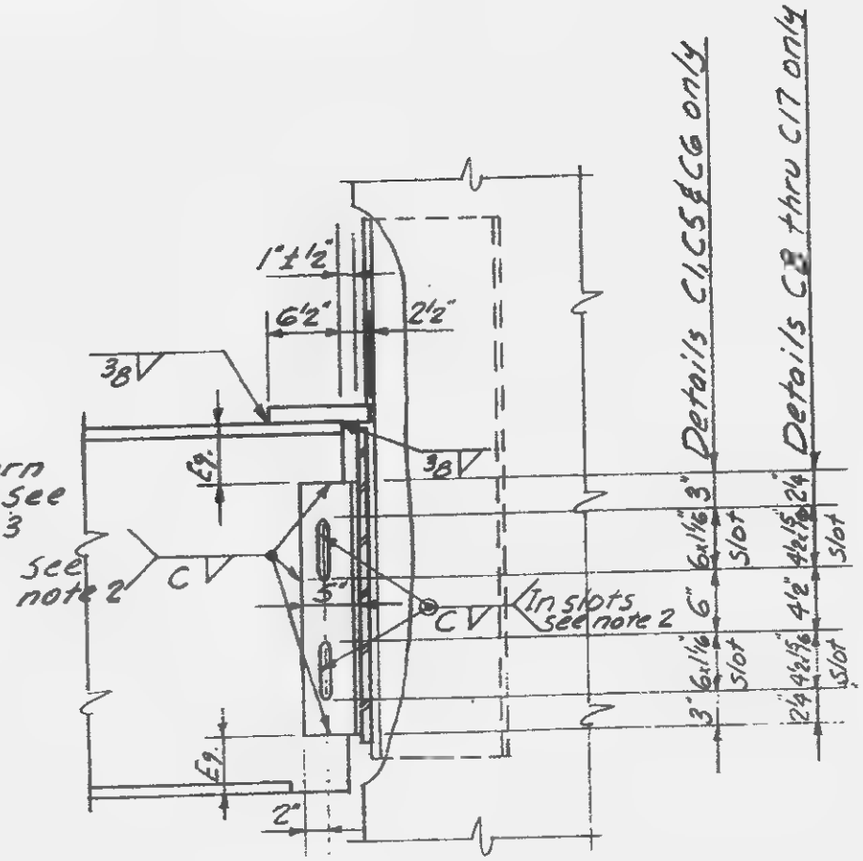

Section

Notes:

1. See notes on 12-JK5-1
2. If erection clearance is allowed between beam web & connection angles, size of weld has to be increased by the dimension of this gap. (Max clearance = 1/8")
3. Due to the deviation of exist beam supports, the weld size shown has to be increased by the dimension of the gap between ℄ and sup't. In no case should this gap be greater than 1/8".

LICENSED PROFESSIONAL ENGINEER — LESLIE E. ROBERTSON — No. 34960 — UNIVERSITY OF THE STATE OF NEW YORK

DESIGNED J.H.

DRAWN A.L. FRANQUI

REVIEWED E.L.

12-JK5-6

SKILLING, HELLE, CHRISTIANSEN, ROBERTSON — Structural & Civil Engineers

PROJECT THE WORLD TRADE CENTER | TITLE BEAM CONNECTIONS TO SLURRY WALL-DETAIL D | DATE 3-19-69

REVISIONS

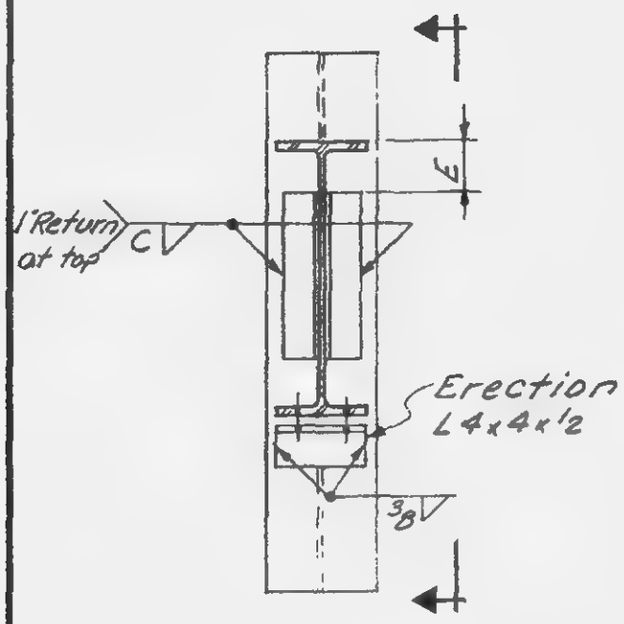

Elevation

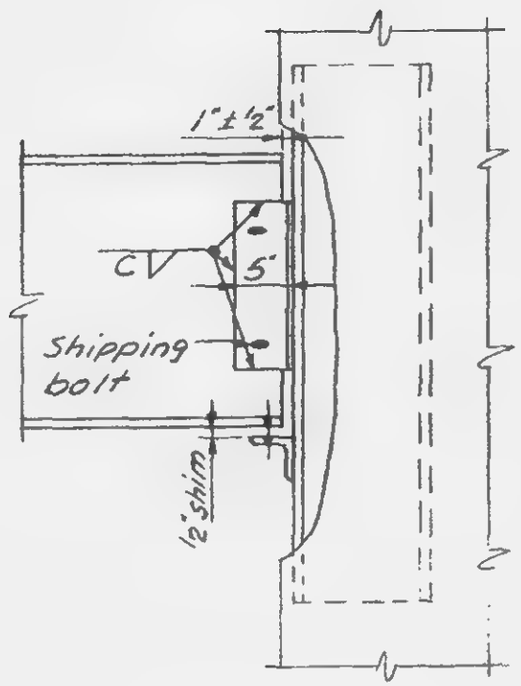

Section

Notes:
1. See notes on 12-JK5-1.

LICENSED PROFESSIONAL ENGINEER
LESLIE E. ROBERTSON
No. 34360
UNIVERSITY OF THE STATE OF NEW YORK

DESIGNED J.H.
DRAWN A.L.FRANQUI
REVIEWED E.L.

12-JK5-7

SKILLING, HELLE, CHRISTIANSEN, ROBERTSON — Structural & Civil Engineers

PROJECT THE WORLD TRADE CENTER | TITLE BEAM CONNECTIONS TO SLURRY WALL - DETAIL E | DATE 3-19-69

REVISIONS

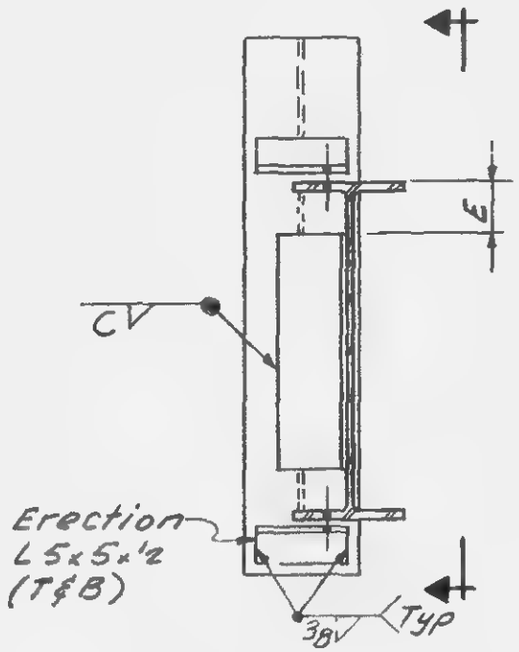

Elevation

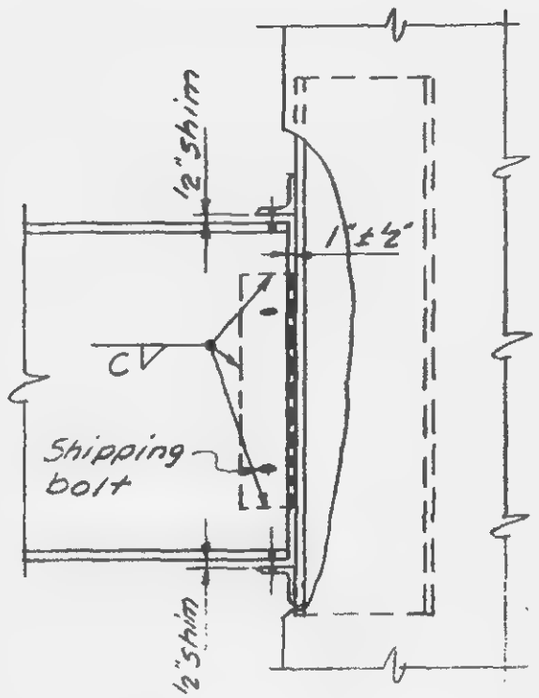

Section

Notes

1. See notes on 12-JK5-1.

LICENSED PROFESSIONAL ENGINEER
LESLIE E. ROBERTSON
No. 34360
UNIVERSITY OF THE STATE OF NEW YORK

DESIGNED J.H.

DRAWN A.L. FRANQUI

REVIEWED E.L.

12-JK5-8

SKILLING, HELLE, CHRISTIANSEN, ROBERTSON — Structural & Civil Engineers

PROJECT THE WORLD TRADE CENTER | TITLE BEAM CONNECTIONS TO SLURRY WALL-DETAIL F | DATE 3-31-69

REVISIONS

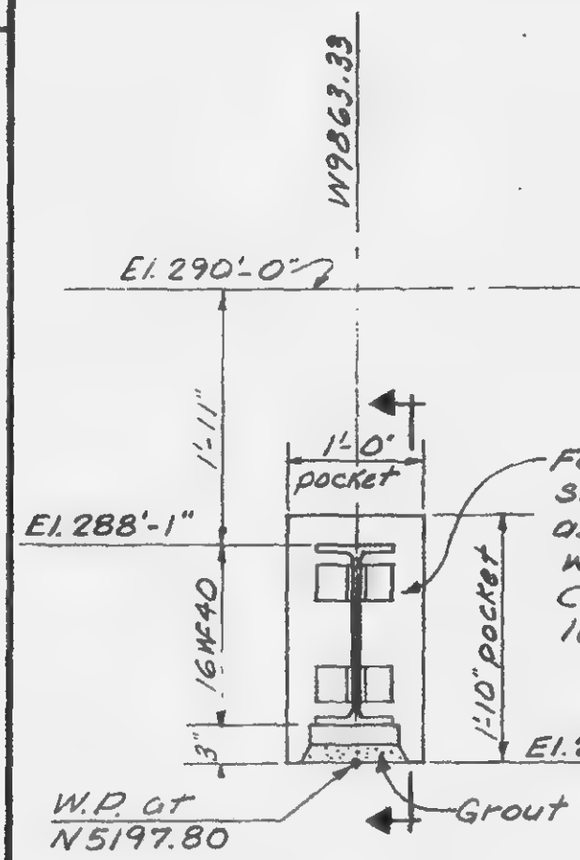

Elevation

DETAIL F1

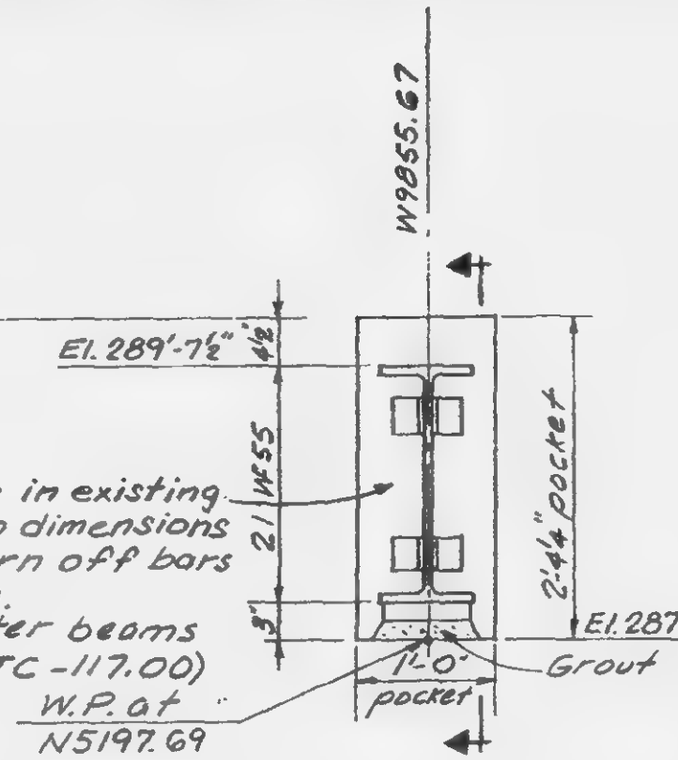

Elevation

DETAIL F2

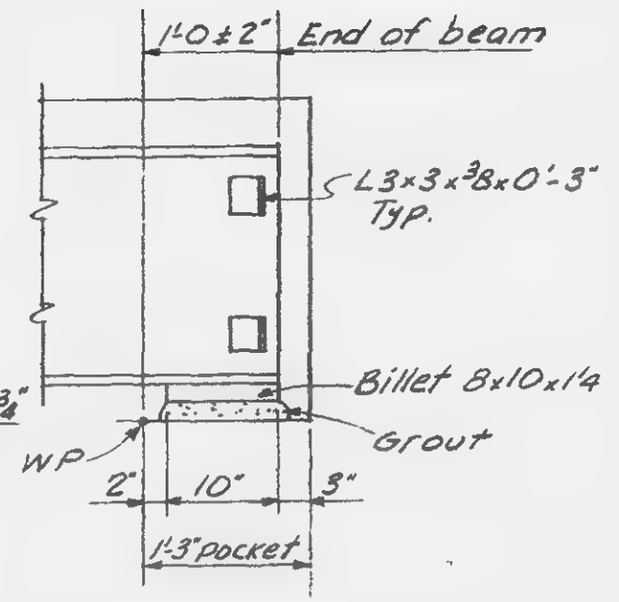

Section

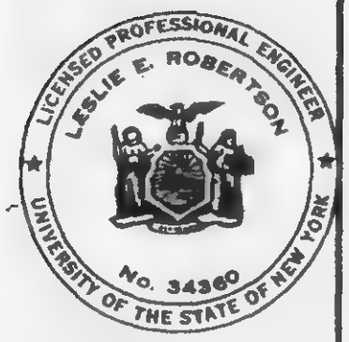

3-3-69
2-14-69

DRAWN A.L.F.

REVIEWED E.L

12-JK5-9

SKILLING, HELLE, CHRISTIANSEN, ROBERTSON — Structural & Civil Engineers

PROJECT THE WORLD TRADE CENTER | TITLE BEAM CONNECTIONS TO SLURRY WALL-DETAIL G | DATE 3-19-69

REVISIONS

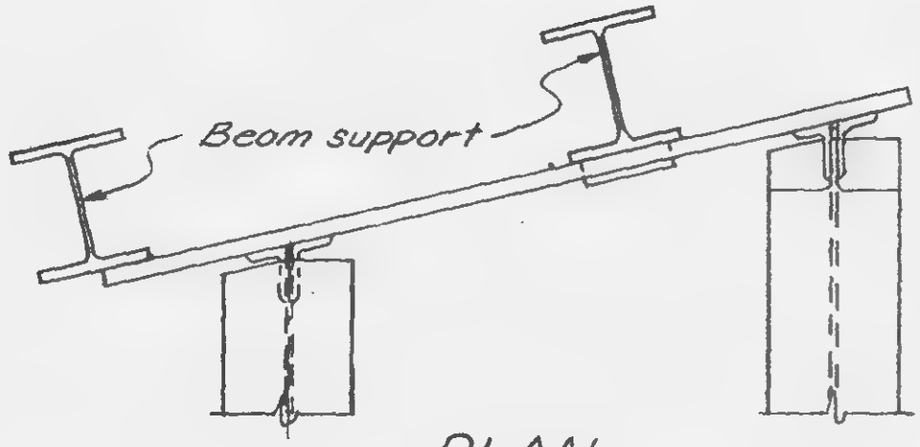

PLAN

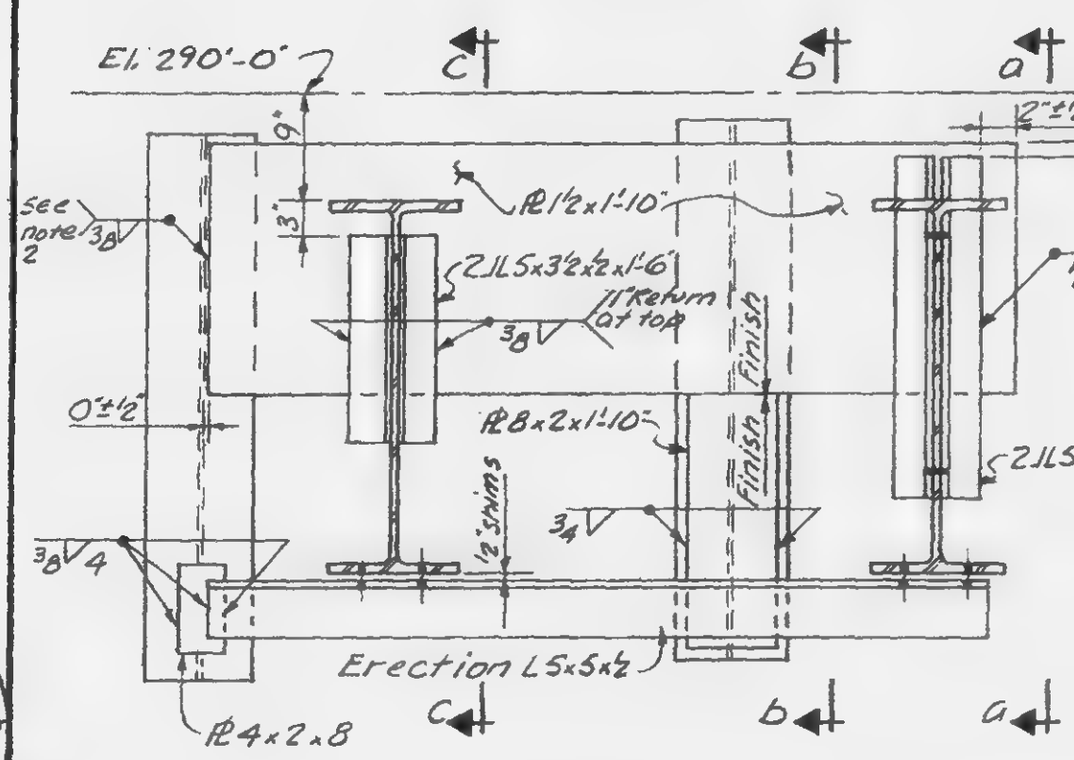

ELEVATION

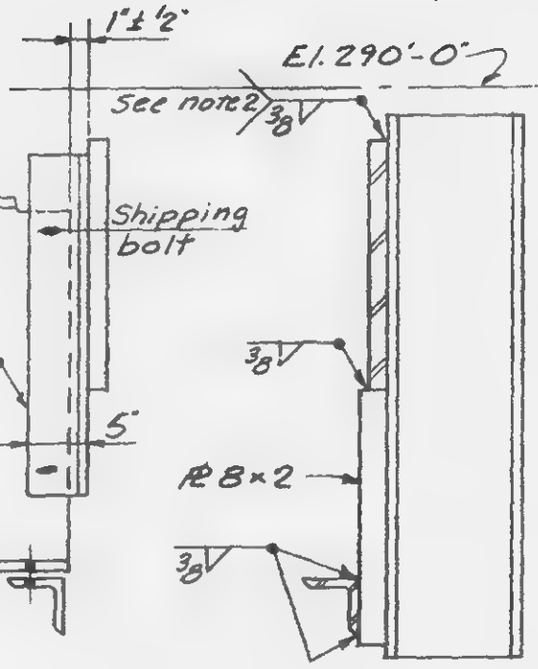

Section a-a

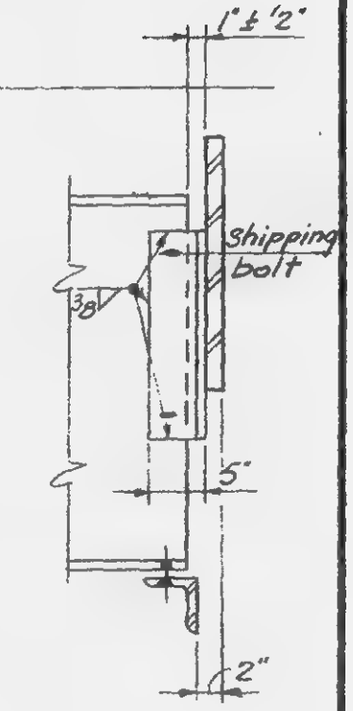

Section b-b Section c-c

Notes:

1. See notes on 12-JK5-1.
2. Due to the deviation of exist beam supports, the weld size shown has to be increased by the dimension of the gap between PL and sup't. In no case should this gap be greater than ½".

LICENSED PROFESSIONAL ENGINEER — LESLIE E. ROBERTSON — No. 34960 — UNIVERSITY OF THE STATE OF NEW YORK

DESIGNED J.H.

DRAWN A.L. FRANGOJI

REVISED

12-JK5-10

SKILLING, HELLE, CHRISTIANSEN, ROBERTSON — Structural & Civil Engineers

PROJECT: THE WORLD TRADE CENTER | TITLE: BEAM CONNECTION TO SLURRY WALL - DETAIL H | DATE: 4-18-69

REVISIONS

5-29-69

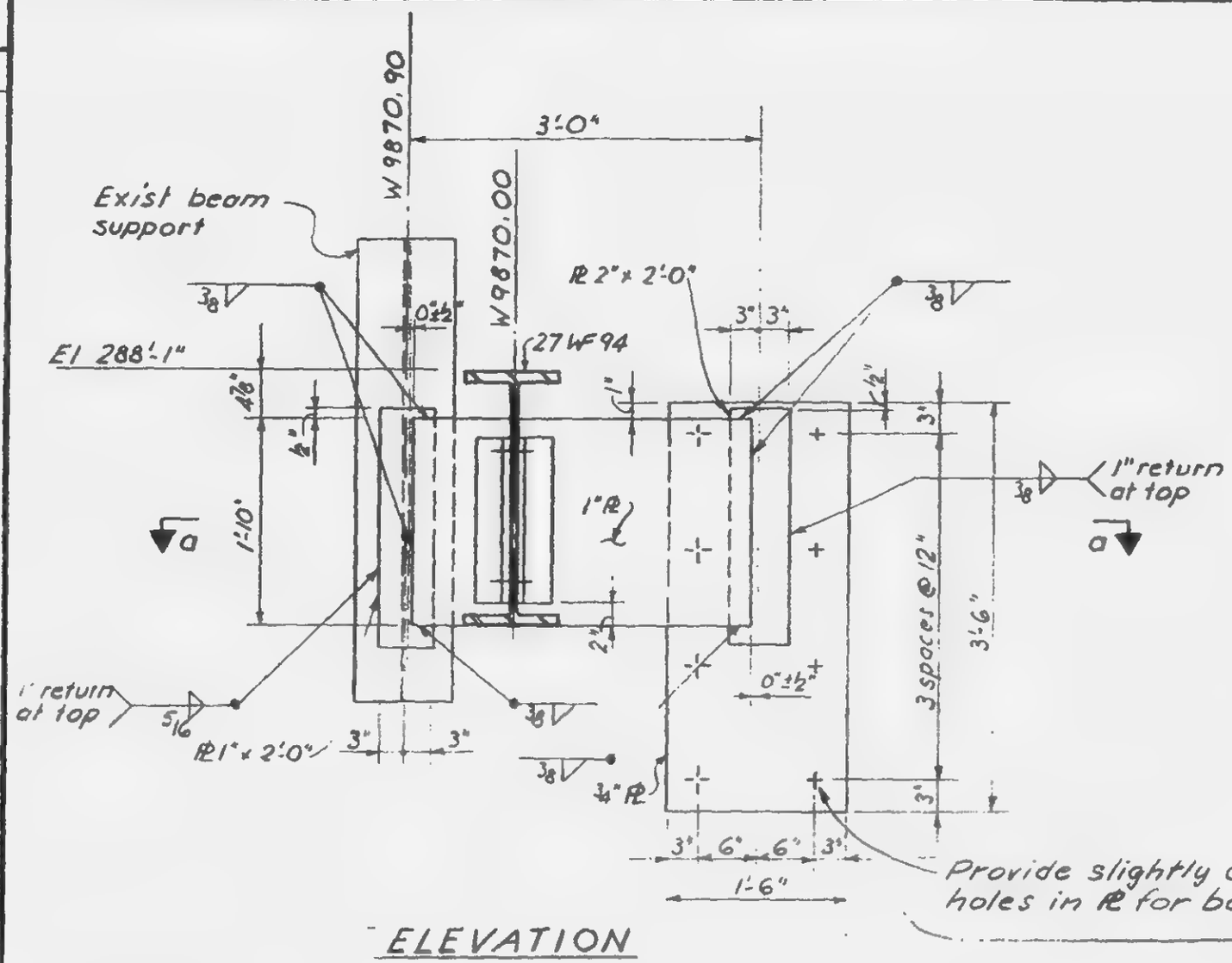

ELEVATION

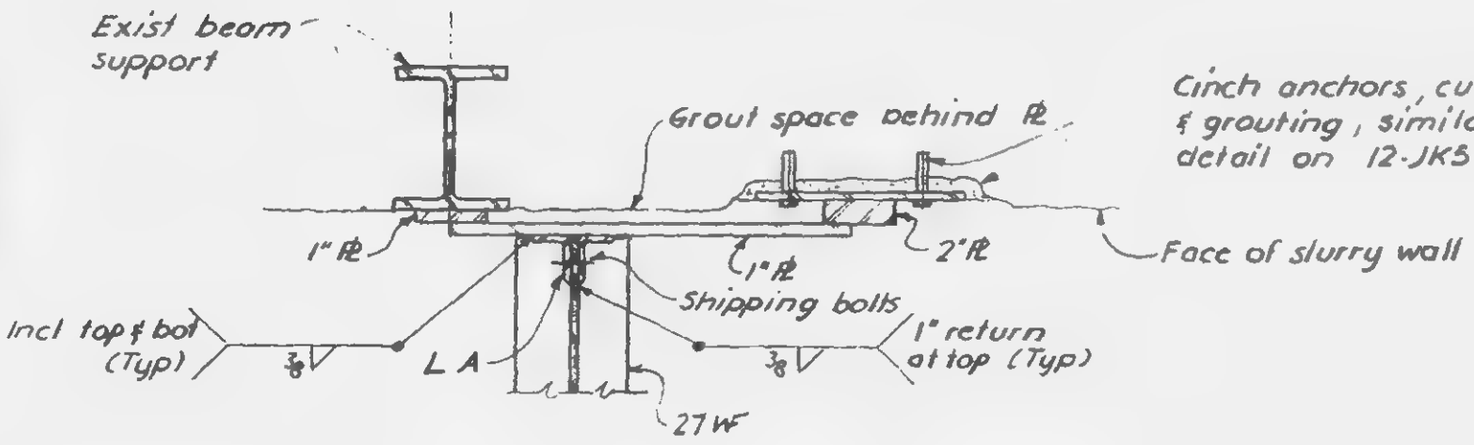

Section a-a

Notes:

1. See Notes on 12-JK5-1.
2. If erection clearance is allowed btw beam web & connection angles, size of weld has to be increased by the dimension of this gap (max clearance = ⅛")
3. Due to the deviation of exist beam support, the weld size shown has to be increased by the dimensions of the gap btwn PL and support. In no case should this gap be greater than ⅛".

LICENSED PROFESSIONAL ENGINEER — LESLIE E. ROBERTSON — No. 24360 — UNIVERSITY OF THE STATE OF NEW YORK

DESIGNED

DRAWN: F. Smith

REVIEWED: E.L.

12-JK5-11

SKILLING, HELLE, CHRISTIANSEN, ROBERTSON — Structural & Civil Engineers

PROJECT THE WORLD TRADE CENTER | TITLE BEARING PLATES UNDER 60"ϕ PIPE SUPPORTS | DATE 12-2-69

REVISIONS

12-10-69

1-6-70

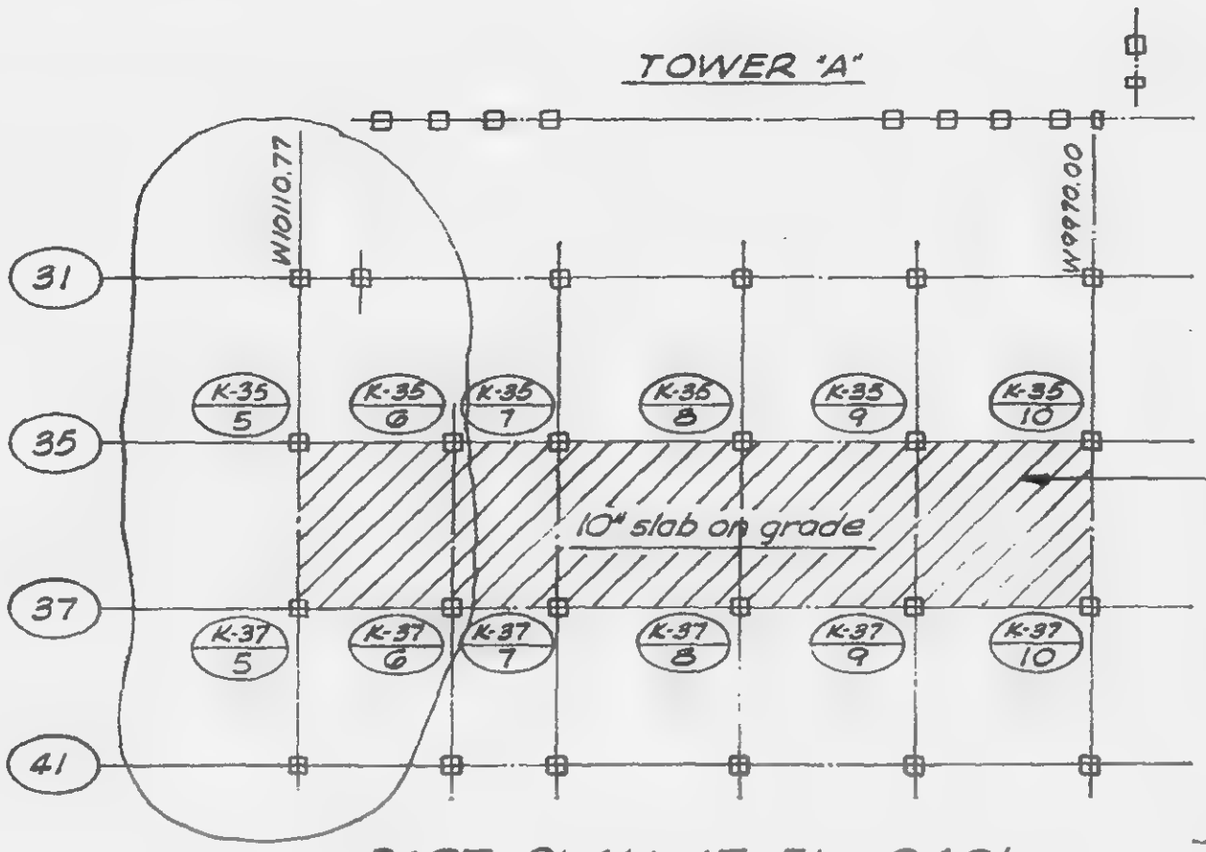

PART PLAN AT EL. 242'

Provide (20 pieces) of 3'-0" × 1" × 5'-0" PL's (A-36) under 60"ϕ pipe supports within shaded area. See Mech. shop Dwgs. (Sand-Courter 5C-2-12) for exact locations. PL's to be erected by Mechanical Contractor.

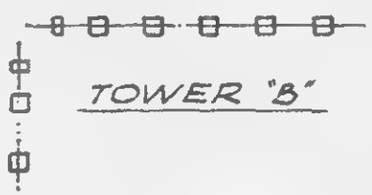

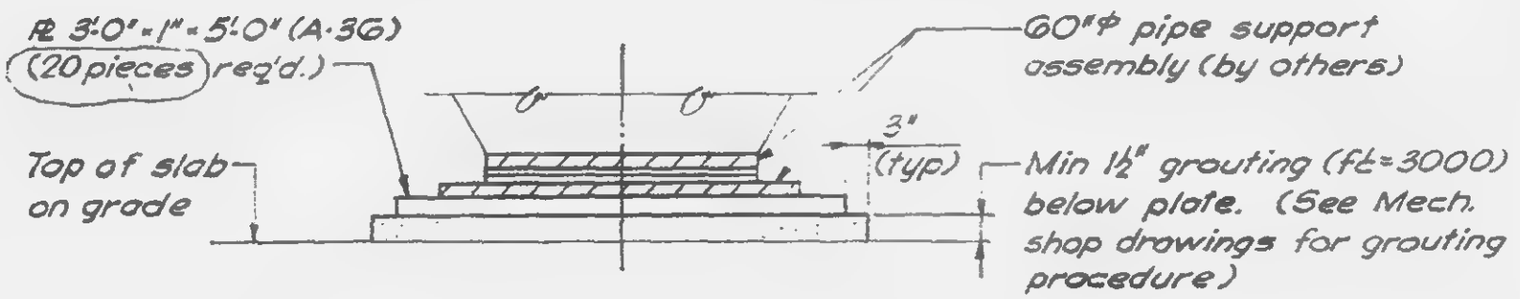

LICENSED PROFESSIONAL ENGINEER — LESLIE E. ROBERTSON — No. 34360 — UNIVERSITY OF THE STATE OF NEW YORK

DESIGNED

DRAWN G. K.

REVIEWED E. L.

12-UKG-1

SKILLING, HELLE, CHRISTIANSEN, ROBERTSON — Structural & Civil Engineers

PROJECT: THE WORLD TRADE CENTER | TITLE: REPAIR AT FIRE DAMAGE AREA - EL. 310' | DATE: 5-26-72

REVISIONS

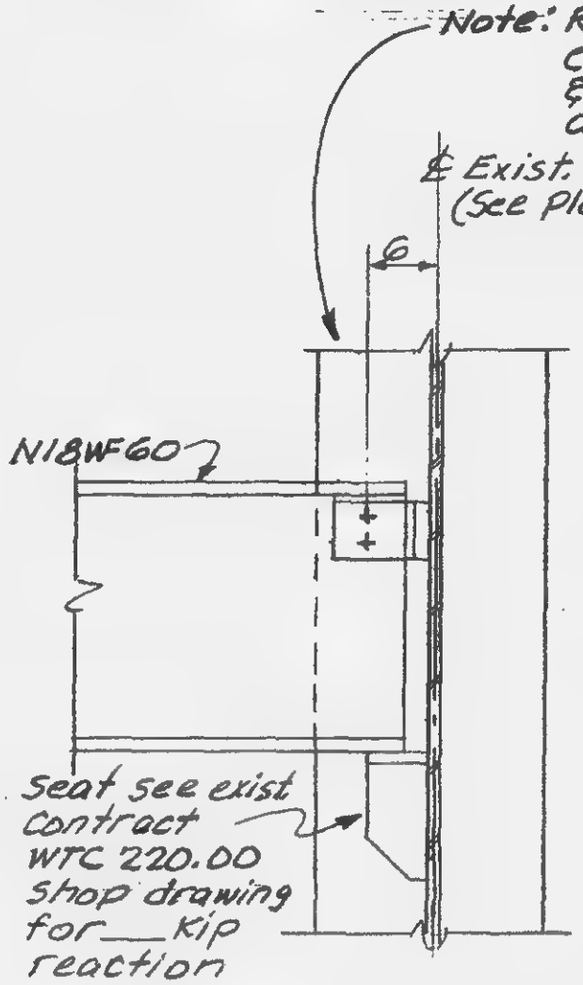

Detail B

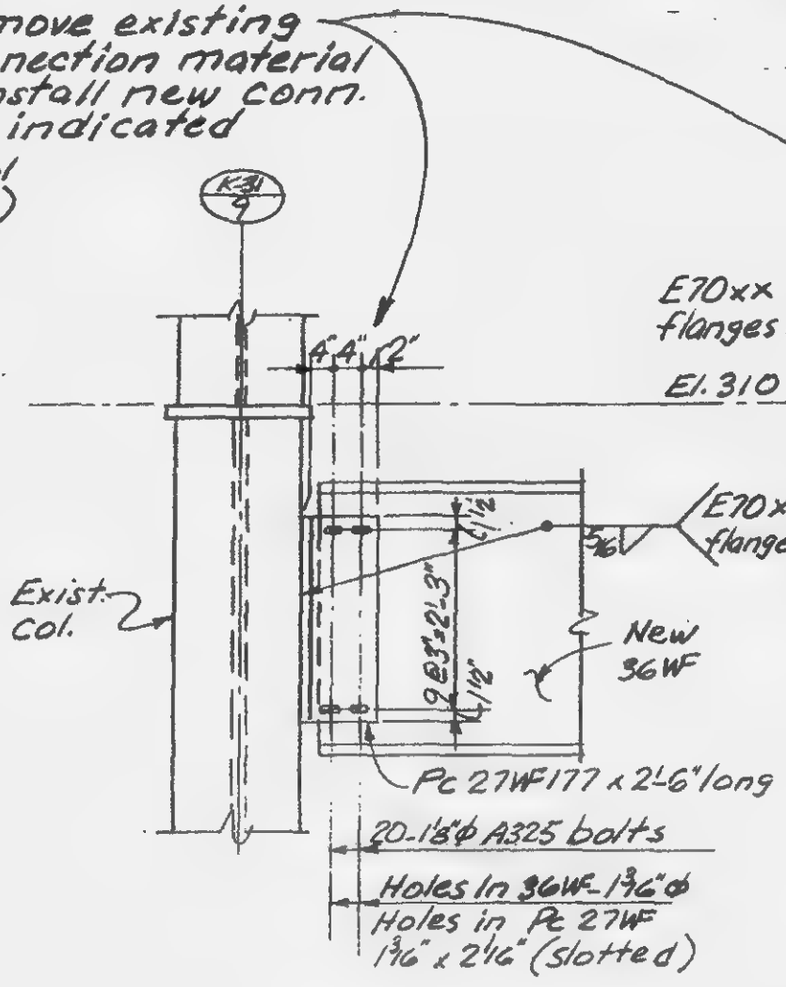

Detail C

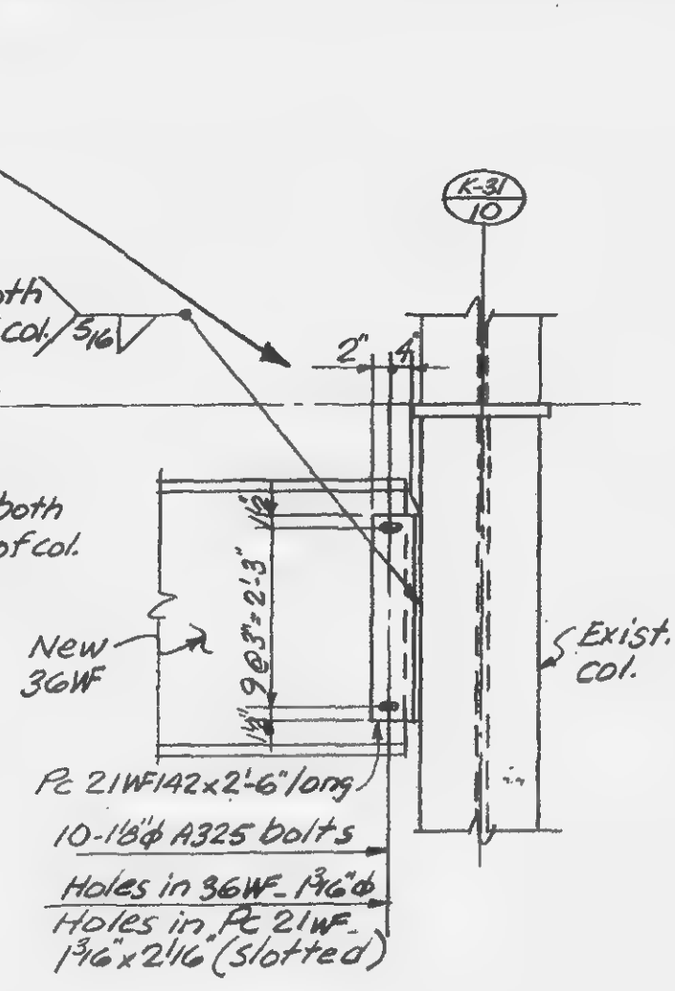

Detail D

Note:
Remove concrete as necessary from columns to make connections. Replace after connections have been completed.

LICENSED PROFESSIONAL ENGINEER — LESLIE E. ROBERTSON — No. 34360 — UNIVERSITY OF THE STATE OF NEW YORK

DESIGNED K. Chiang

DRAWN A.L. Franqui

REVIEWED

12-JK7-3

SKILLING, HELLE, CHRISTIANSEN, ROBERTSON — Structural & Civil Engineers

PROJECT THE WORLD TRADE CENTER | TITLE REPAIR AT FIRE DAMAGE AREA - EL. 310' | DATE 5-26-72

REVISIONS

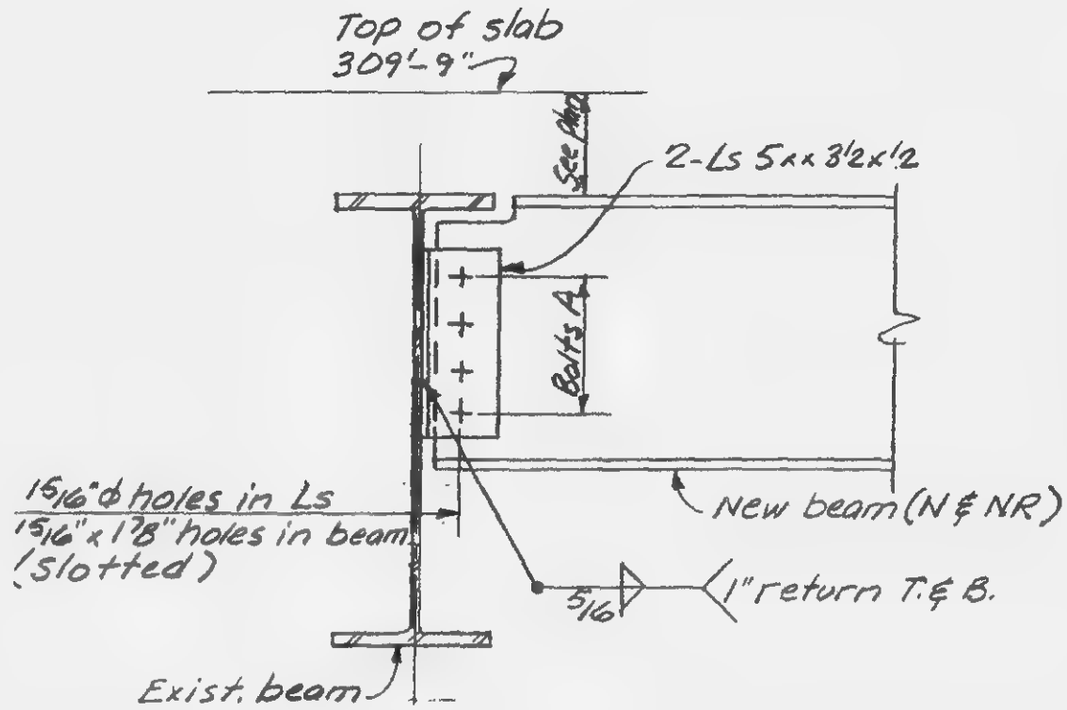

New Beam	Bolts A
16WF45	3-¾"ϕ A325
16WF40	4-⅞"ϕ A325
18WF	4-¾"ϕ A325
24WF & 24B	4-¾"ϕ A325

Detail E

LICENSED PROFESSIONAL ENGINEER — LESLIE E. ROBERTSON — No 34360 — UNIVERSITY OF THE STATE OF NEW YORK

DESIGNED K. Chiang

DRAWN A.L. Franqui

REVIEWED

12-JK7-4

SKILLING, HELLE, CHRISTIANSEN, ROBERTSON — Structural & Civil Engineers

PROJECT: THE WORLD TRADE CENTER | TITLE: REPAIR DETAIL - EL. 310 | DATE: 6-5-72

REVISIONS

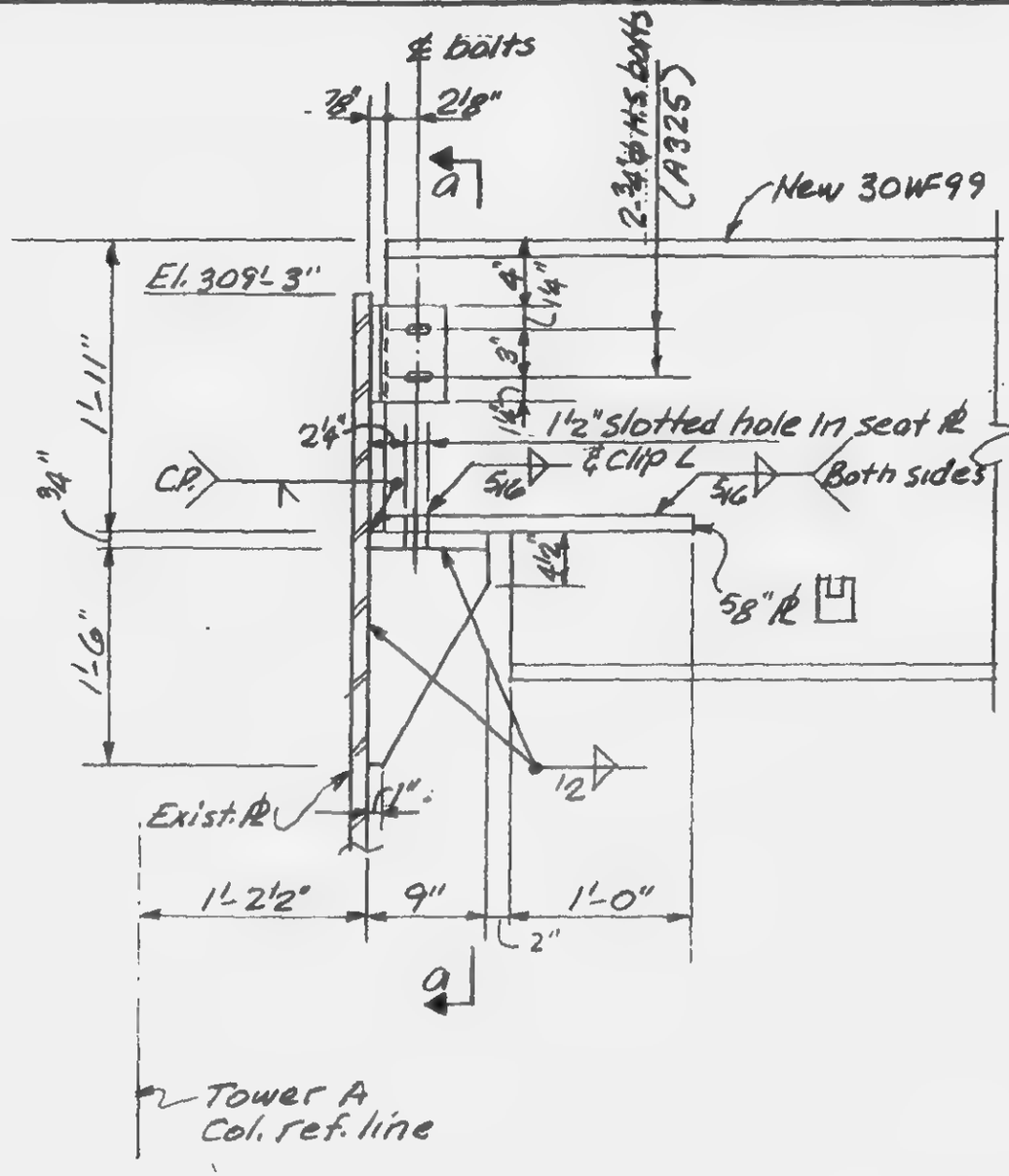

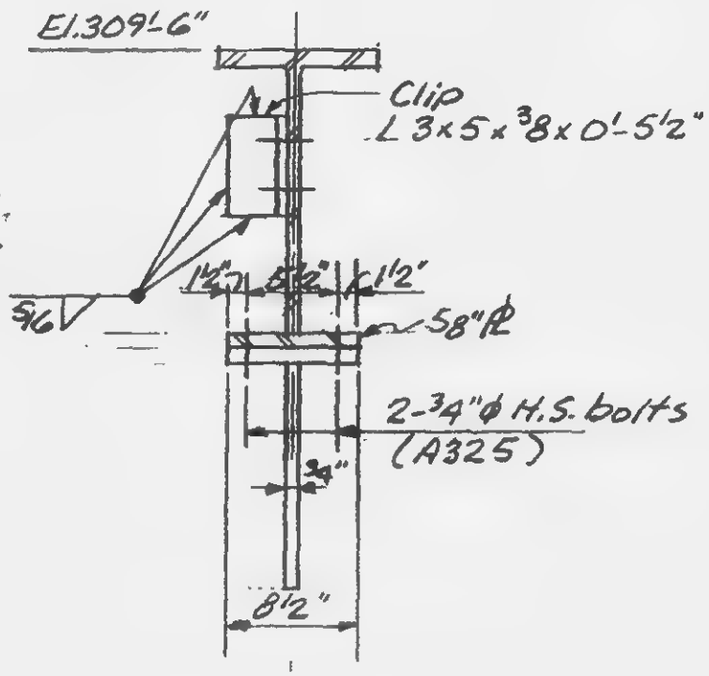

Section a-a

Note: All new material A36 steel.

LICENSED PROFESSIONAL ENGINEER — LESLIE E. ROBERTSON — No 34360 — UNIVERSITY OF THE STATE OF NEW YORK

DESIGNED J.M.

DRAWN A.L.F.

REVIEWED

12-JK7-5

SKILLING, HELLE, CHRISTIANSEN, ROBERTSON — Structural & Civil Engineers

PROJECT: THE WORLD TRADE CENTER | TITLE: KI-EL. 310 REPAIR DETAIL FOR EXISTING STEEL | DATE: 6-12-72

REVISIONS
6-16-72
1-24-73

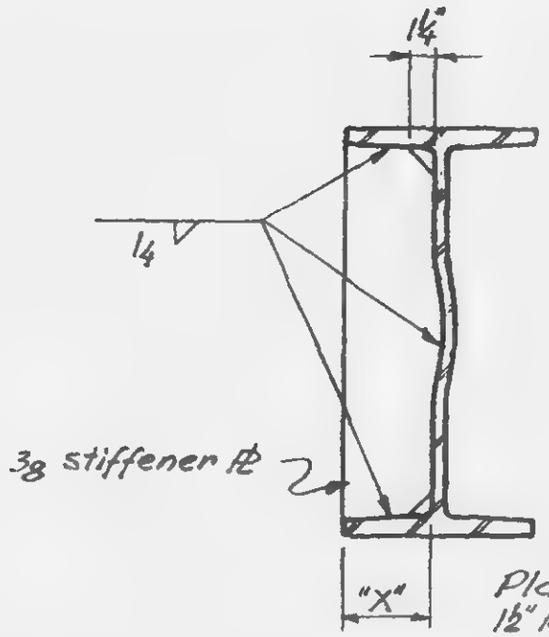

Section a-a

Plate to be fabricated 1½" larger than dimension "X" to allow for trimming.

Note F (SK-97) Where req'd repair as Detail F-6

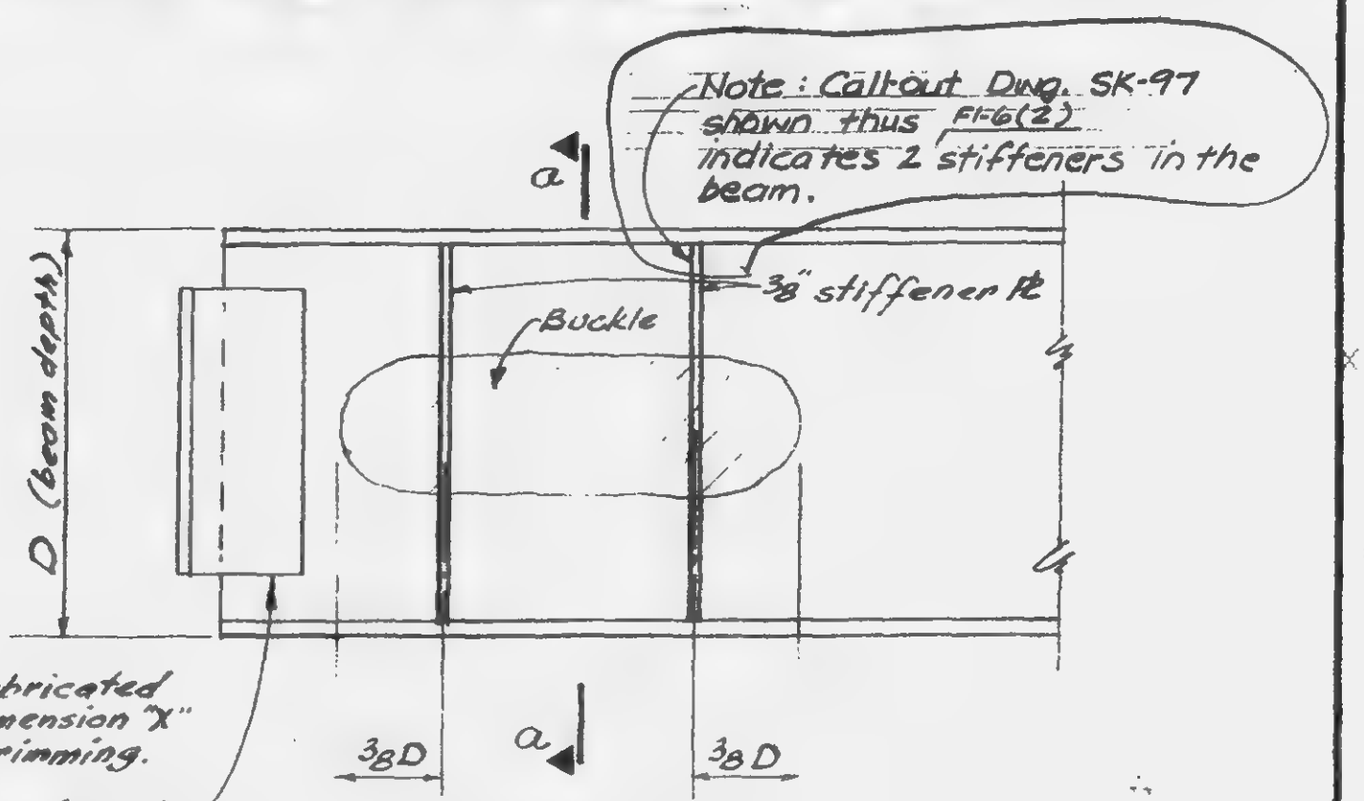

Length of buckle

Procedure

1. Trim vertical stiffener plates to fit and install number and location as shown in table.

3/8" stiffener plates to be placed as follows:

LENGTH OF BUCKLE	NO. OF PLATES	PLACEMENT OF STIFFENERS
C.75 D	1	Center in bulge
0.75 D > 1.00 D	2	as shown above
1.00 D > 2.00 D	3	2 outside as shown above - center one centered between

Detail F1
Buckled web

LICENSED PROFESSIONAL ENGINEER — LESLIE E. ROBERTSON — No. 24960 — UNIVERSITY OF THE STATE OF NEW YORK

DESIGNED
DRAWN
REVIEWED

12-JK7-6

SKILLING, HELLE, CHRISTIANSEN, ROBERTSON — Structural & Civil Engineers

PROJECT: THE WORLD TRADE CENTER | TITLE: KI-EL. 310 REPAIR DETAIL FOR EXISTING STEEL | DATE: 6-12-72

REVISIONS

6-16-72

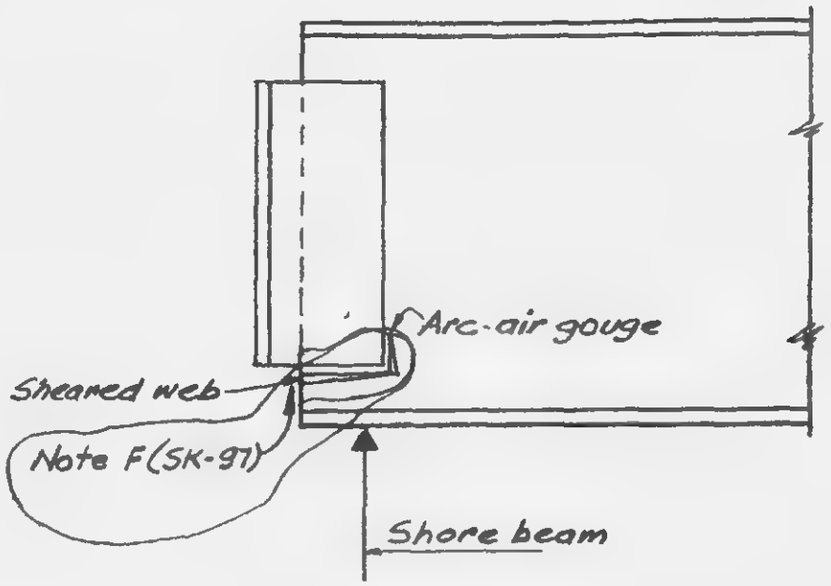

Procedure

1. Shore beam
2. Remove angle connection
3. Drill hole to terminate crack.
4. Straighten and arc-air gouge area of sheared web.
5. Replace with sound weld metal or remove distorted material and replace with C.P. welded A36 patch plate of same thickness as web
6. Replace connection to provide kip reaction indicated in Plan.
7. Remove shores.

Detail F2

Sheared web

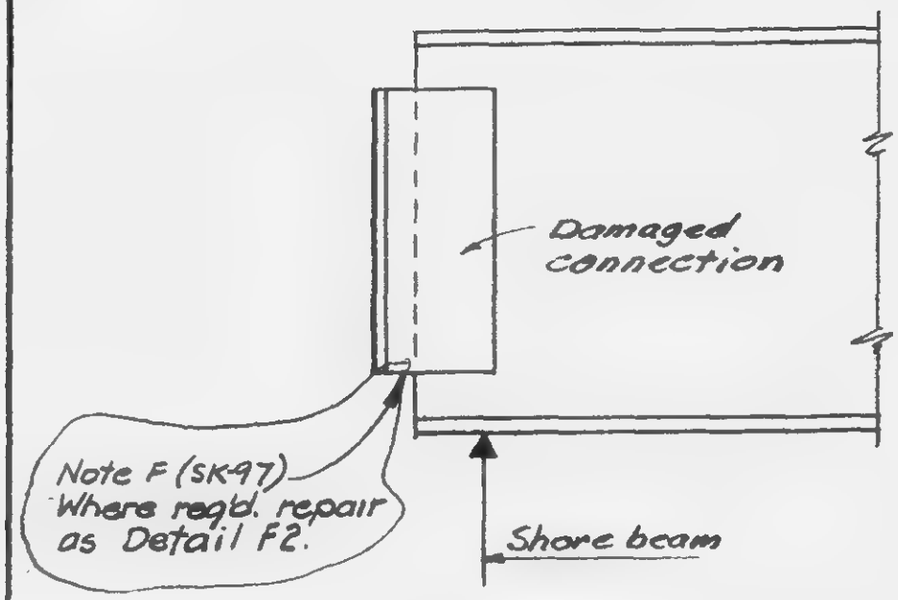

Procedure

1. Shore beam.
2. Remove damaged connection. (bolts, angles and weld.)
3. Replace with same type connection, but capacity to be as shown in Plan.
4. Remove shores.

Detail F3

Failed connection

Detail F10

1. Connection to be examined by the "Engineer" and where signs of damaged are found connection to be replaced in accordance with Detail F3
2. See also Note F (SK-97)

LICENSED PROFESSIONAL ENGINEER — LESLIE E. ROBERTSON — No. 34360 — UNIVERSITY OF THE STATE OF NEW YORK

DESIGNED

DRAWN

REVIEWED

12-JK7-7

SKILLING, HELLE, CHRISTIANSEN, ROBERTSON — Structural & Civil Engineers

PROJECT: THE WORLD TRADE CENTER | TITLE: K1-EL. 310 REPAIR DETAIL FOR EXISTING STEEL | DATE: 6-12-72

REVISIONS

Printed 6-16-72

1-24-73

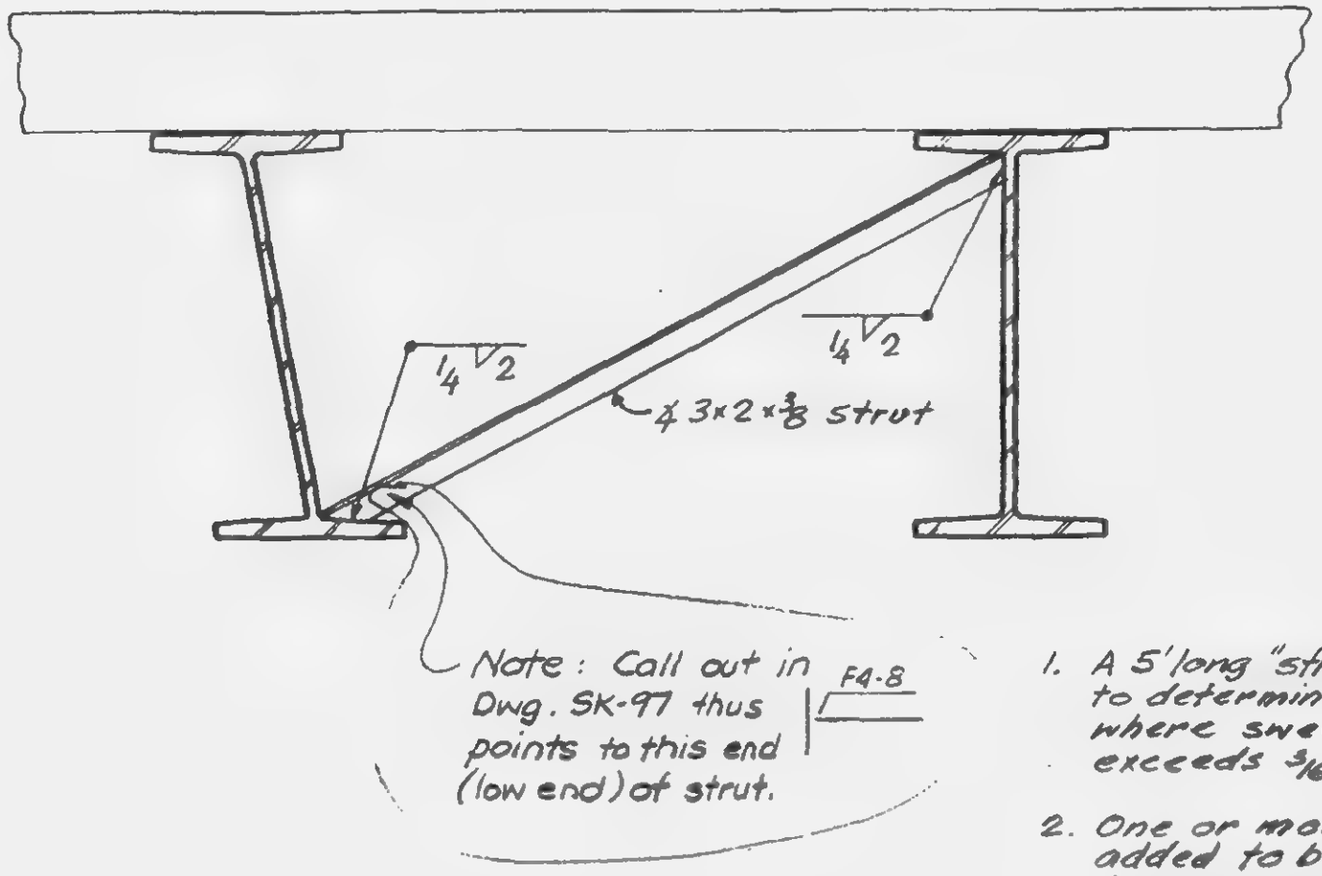

1. A 5' long "straight-edge" will be used to determine portions of beam where sweep (dimension "S") exceeds 3/16 in 5'-0" of length.
2. One or more struts are to be added to beams indicated as "F4" in Plan. Actual number and location to be determined by the "Engineer" in field.

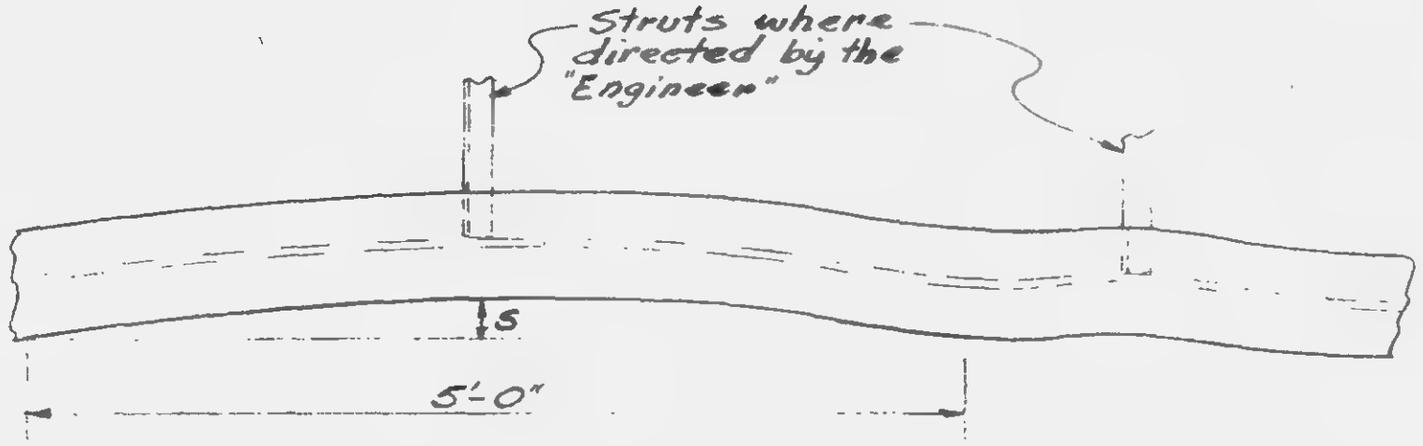

Detail F4

Sweep

LICENSED PROFESSIONAL ENGINEER — LESLIE E. ROBERTSON — No 24360 — UNIVERSITY OF THE STATE OF NEW YORK

DESIGNED

DRAWN

REVIEWED

12-JK7-8

SKILLING, HELLE, CHRISTIANSEN, ROBERTSON — Structural & Civil Engineers

PROJECT: THE WORLD TRADE CENTER | TITLE: KI EL. 310 REPAIR DETAIL FOR EXISTING STEEL | DATE: 6-12-72

REVISIONS

6-16-72

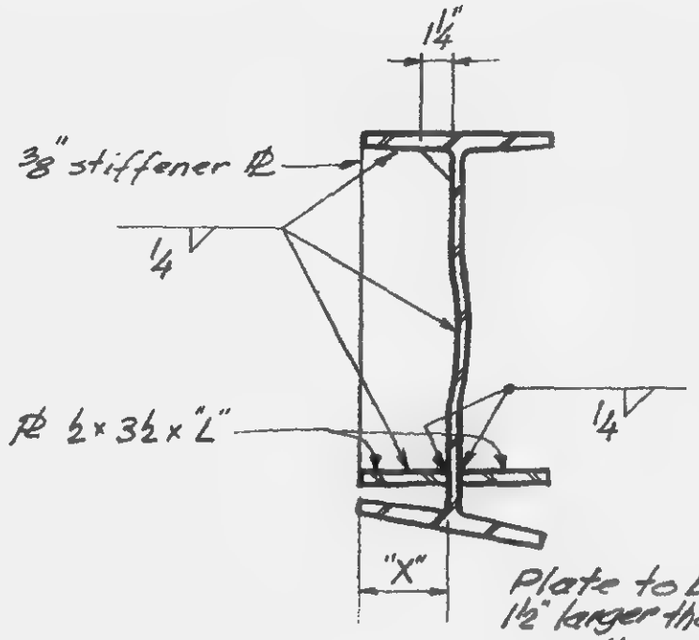

Section a-a

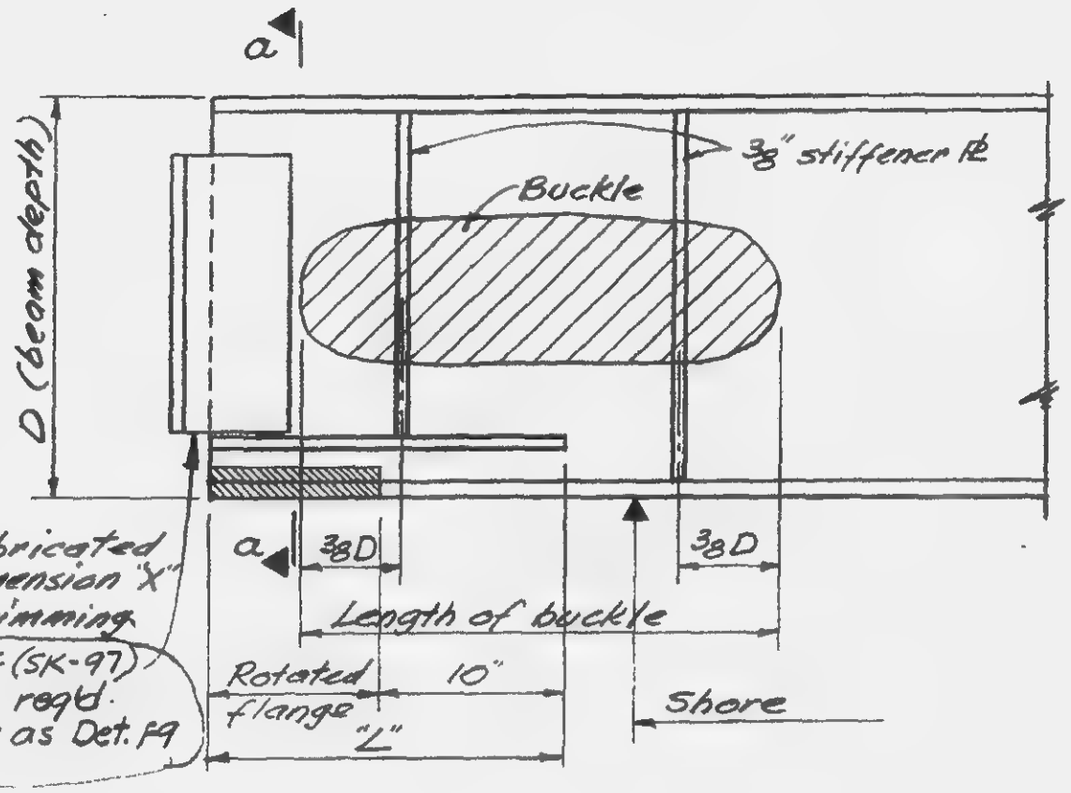

Plate to be fabricated 1½" larger than dimension "X" to allow for trimming

Note F (SK-97) Where reqd. repair as Det. F9

Procedure

1. Shore beam.
2. Remove damaged connections.
3. Replace with same type connection, but capacity to be as shown in Plan.
4. Install horizontal plates.
5. Trim vertical stiffener plates to fit and install number and location as shown in table.
6. Remove shores.

3/8" stiffener plates to be placed as follows:

LENGTH OF BUCKLE	NO. OF PLATES	PLACEMENT OF STIFFENERS
0.75 D	1	Center in bulge
0.75 D > 1.00 D	2	as shown above
1.00 D > 2.00 D	3	2 outside as shown above - center one centered between

Detail F5

Buckled web, failed connection & rotated flange

LICENSED PROFESSIONAL ENGINEER — LESLIE E. ROBERTSON — No. 34360 — UNIVERSITY OF THE STATE OF NEW YORK

DESIGNED

DRAWN

REVIEWED

12-JK7-9

SKILLING, HELLE, CHRISTIANSEN, ROBERTSON — Structural & Civil Engineers

PROJECT: THE WORLD TRADE CENTER | TITLE: K1-EL. 310 REPAIR DETAIL FOR EXISTING STEEL | DATE: 6-12-72

REVISIONS

6-16-72

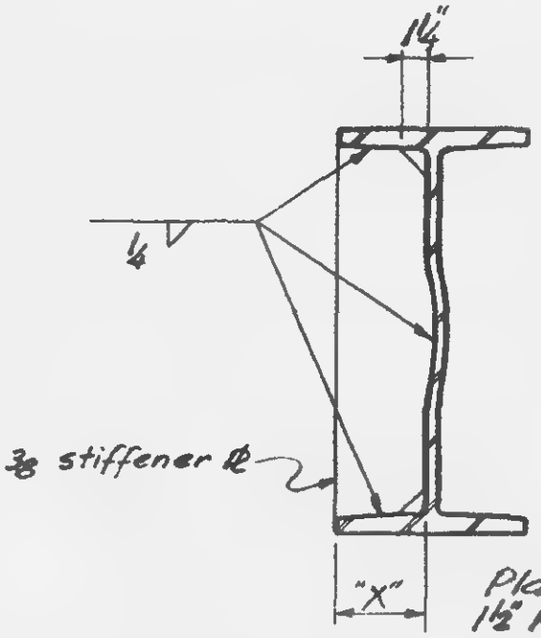

Plate to be fabricated 1½" larger than dimension "X" to allow for trimming.

Section a-a

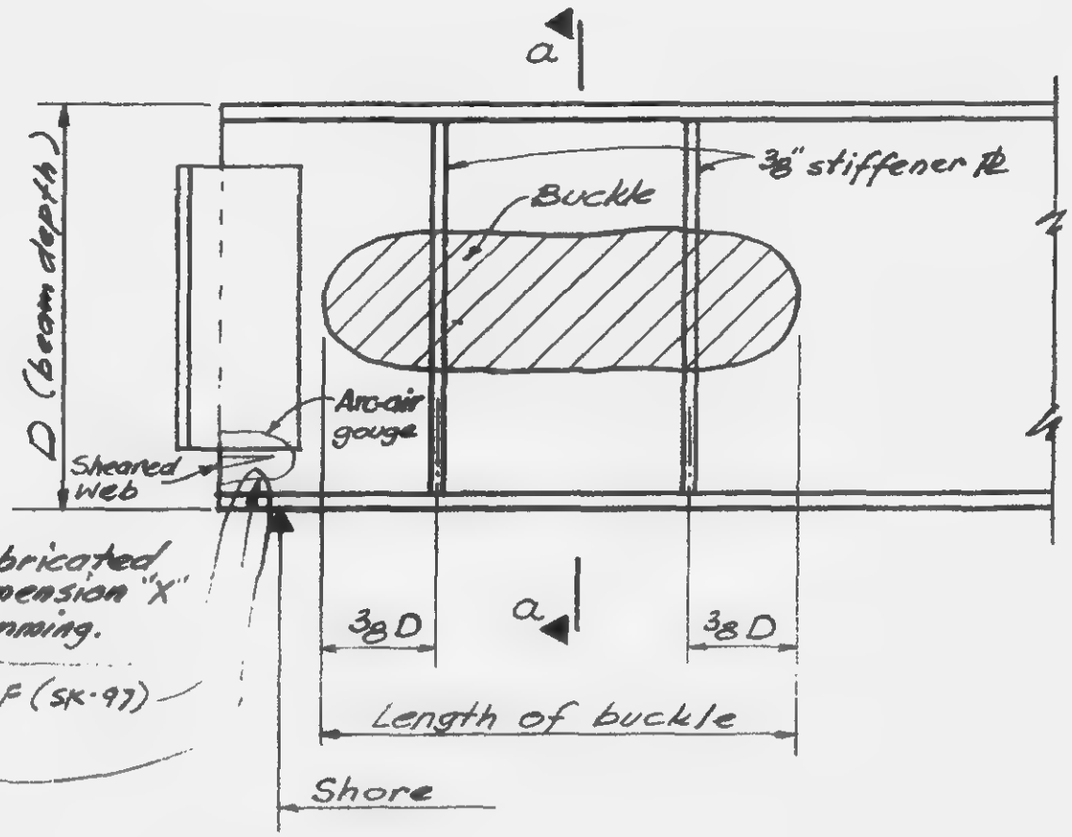

Note F (SK-97)

⅜" stiffener plates to be placed as follows:

LENGTH OF BUCKLE	NO. OF PLATES	PLACEMENT OF STIFFENERS
0.75 D	1	Center in bulge
0.75 D > 1.00 D	2	as shown above
1.00 D > 2.00 D	3	2 outside as shown above center one centered between

Procedure

1. Shore beam.
2. Remove connection.
3. Drill hole to terminate crack
4. Straighten and arc-air gouge area of sheared web.
5. Replace with sound weld metal or remove distorted material and replace with full penetration welded A36 patch plate of same thickness of web.
6. Replace with same type connection, but capacity to be as shown in Plan.
7. Trim vertical stiffener plates to fit and install number and location as shown in Table
8. Remove shores.

Detail F6

Buckled web & sheared web

LICENSED PROFESSIONAL ENGINEER — LESLIE E. ROBERTSON — No. 34360 — UNIVERSITY OF THE STATE OF NEW YORK

DESIGNED

DRAWN

REVIEWED

12-JK7-10

SKILLING, HELLE, CHRISTIANSEN, ROBERTSON — Structural & Civil Engineers

PROJECT: THE WORLD TRADE CENTER | TITLE: KI-EL.310 REPAIR DETAIL FOR EXISTING STEEL | DATE: 6-12-72

REVISIONS

6-16-72

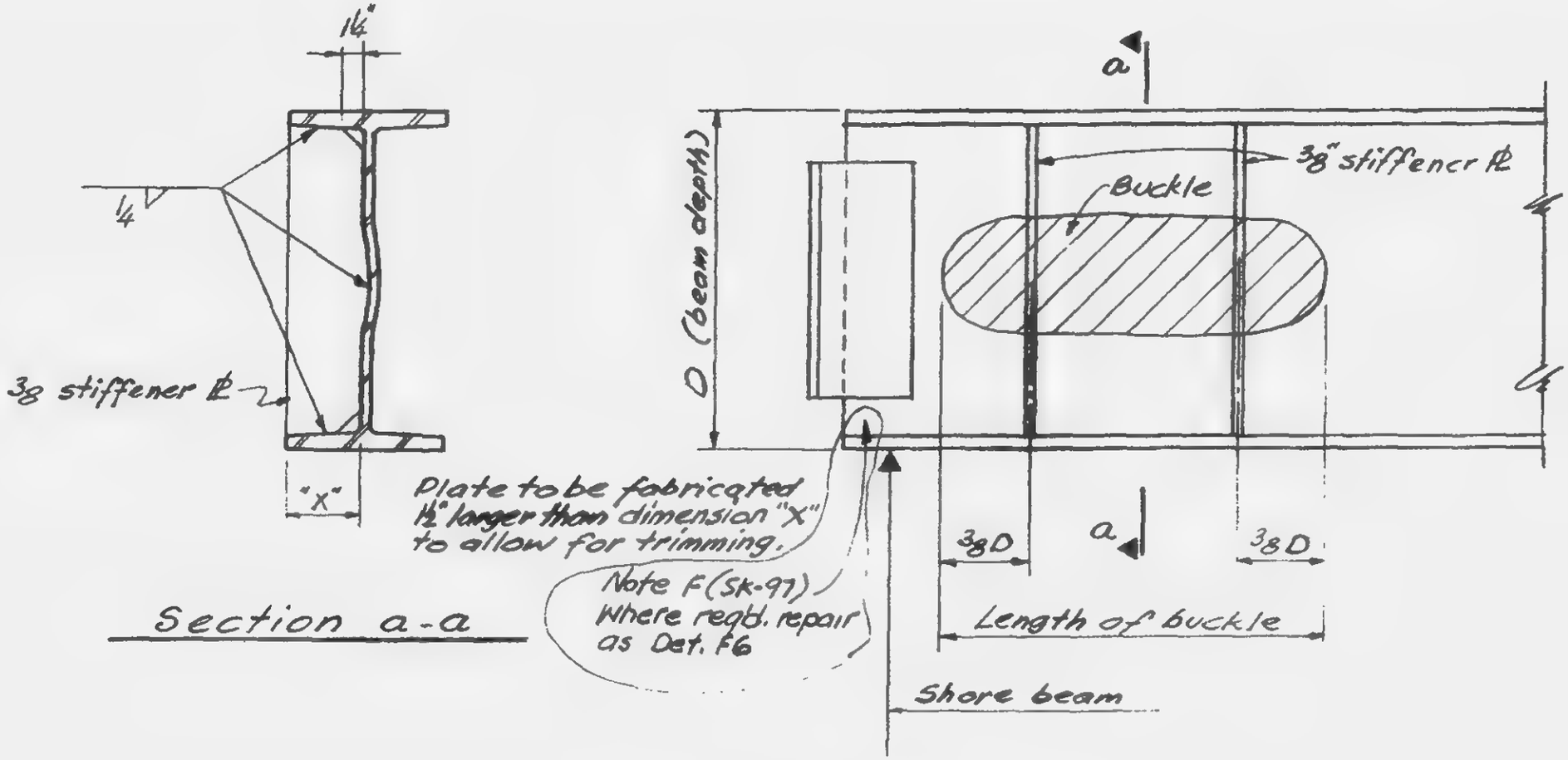

Section a-a

3/8 stiffener plates to be placed as follows:

LENGTH OF BUCKLE	No. of PLATES	PLACEMENT OF STIFFENERS
0.75 D	1	Center in bulge
0.75 D > 1.00 D	2	as shown above
1.00 D > 2.00 D	3	2 outside as shown above - center one centered between

Procedure

1. Shore beam
2. Remove damaged connection. (Bolts, angles & welds)
3. Replace with same type connection, but capacity to be as shown in Plan
4. Trim vertical stiffener plates to fit and install number and location as shown in table
5. Remove shores

LICENSED PROFESSIONAL ENGINEER — LESLIE E. ROBERTSON — No. 34360 — UNIVERSITY OF THE STATE OF NEW YORK

DESIGNED

DRAWN

REVIEWED

Detail F7

Buckled web & failed connection

12-JK7-11

SKILLING, HELLE, CHRISTIANSEN, ROBERTSON — Structural & Civil Engineers

PROJECT: THE WORLD TRADE CENTER | TITLE: K1-EL.310 REPAIR DETAIL FOR EXISTING STEEL | DATE: 6-12-72

REVISIONS

6-16-72

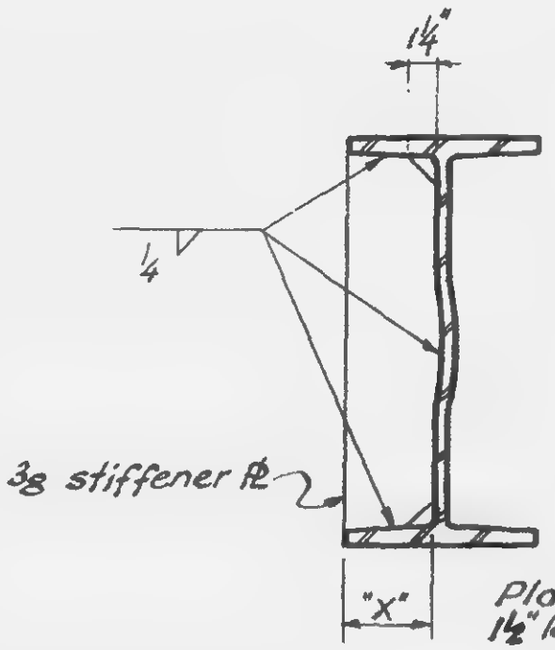

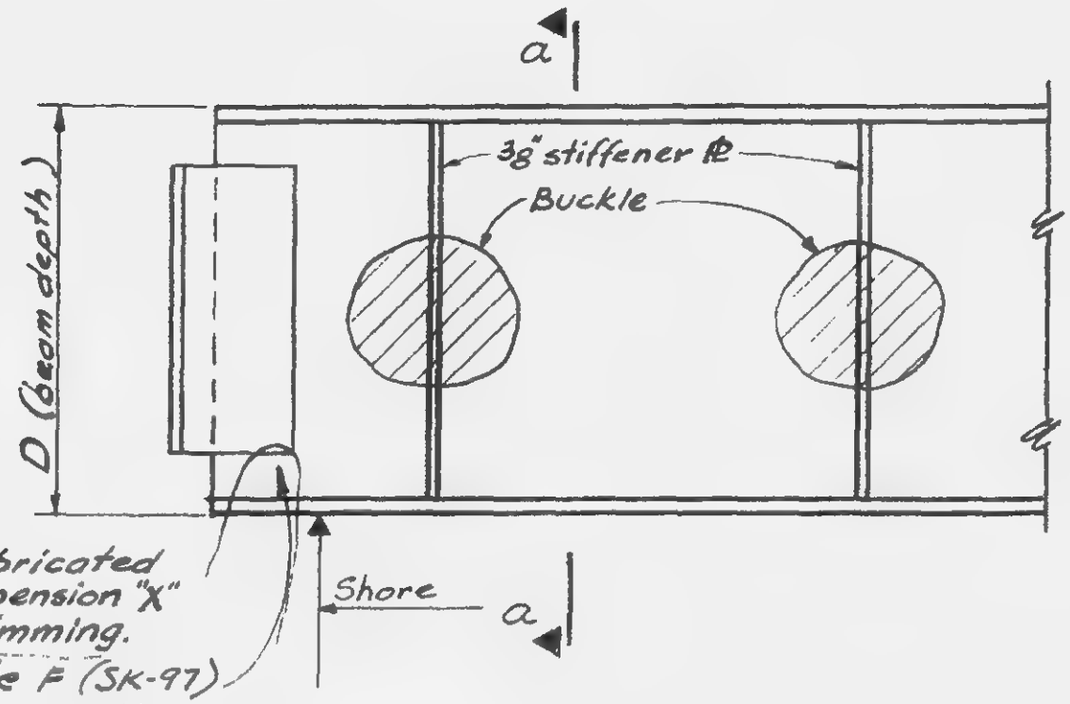

Plate to be fabricated 1½" larger than dimension "X" to allow for trimming.

Note F (SK-97) Where req'd repair, as Det. F6

Section a-a

Procedure

1. Shore beam
2. Remove damaged connection
3. Replace with same type connection, but capacity to be as shown in Plan
4. Trim vertical stiffener plates to fit and install as shown.
5. Remove shores.

LICENSED PROFESSIONAL ENGINEER — LESLIE E. ROBERTSON — No. 34960 — UNIVERSITY OF THE STATE OF NEW YORK

DESIGNED

DRAWN

REVIEWED

Detail F8

Buckled web 2 locations + failed connection

JK7

12-JK-12

SKILLING, HELLE, CHRISTIANSEN, ROBERTSON — Structural & Civil Engineers

PROJECT: THE WORLD TRADE CENTER | TITLE: K1-EL.310 REPAIR DETAIL FOR EXISTING STEEL | DATE: 6-12-72

REVISIONS

6-16-72

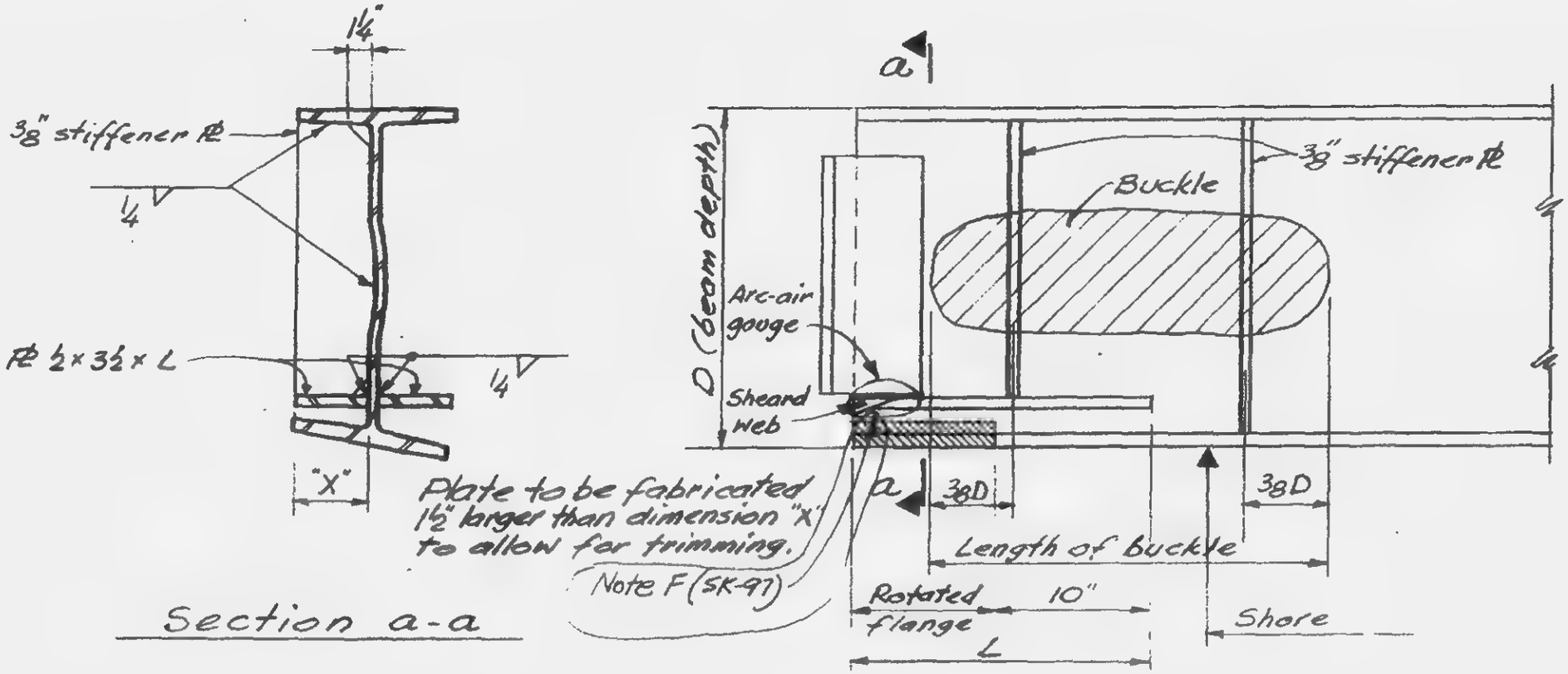

Section a-a

⅜" stiffener plates to be placed as follows:

LENGTH OF BUCKLE	No. OF PLATES	PLACEMENT OF STIFFENERS
0.75 D	1	Center in bulge
0.75 D > 1.00 D	2	as shown above
1.00 D > 2.00 D	3	2 outside as shown above -center one centered between

Procedure

1. Shore beam.
2. Remove angle connections.
3. Drill hole to terminate crack.
4. Straighten and arc-air gouge area of sheared web.
5. Replace with sound weld metal or remove distorted material and replace with full penetration welded A-36 patch plate of same thickness of web.
6. Replace with same type connection, but capacity to be as shown in Plan.
7. Trim vertical stiffener plates to fit and install number and location as shown in table
8. Remove shores.

Detail F9

Buckled web, sheared web & rotated flange

LICENSED PROFESSIONAL ENGINEER — LESLIE E. ROBERTSON — No. 34360 — UNIVERSITY OF THE STATE OF NEW YORK

DESIGNED

REVIEWED

12-JK7-13

SKILLING, HELLE, CHRISTIANSEN, ROBERTSON — Structural & Civil Engineers

PROJECT: THE WORLD TRADE CENTER | TITLE: K1-EL310 REPAIR DETAIL FOR EXISTING STEEL | DATE: 1-24-72

REVISIONS

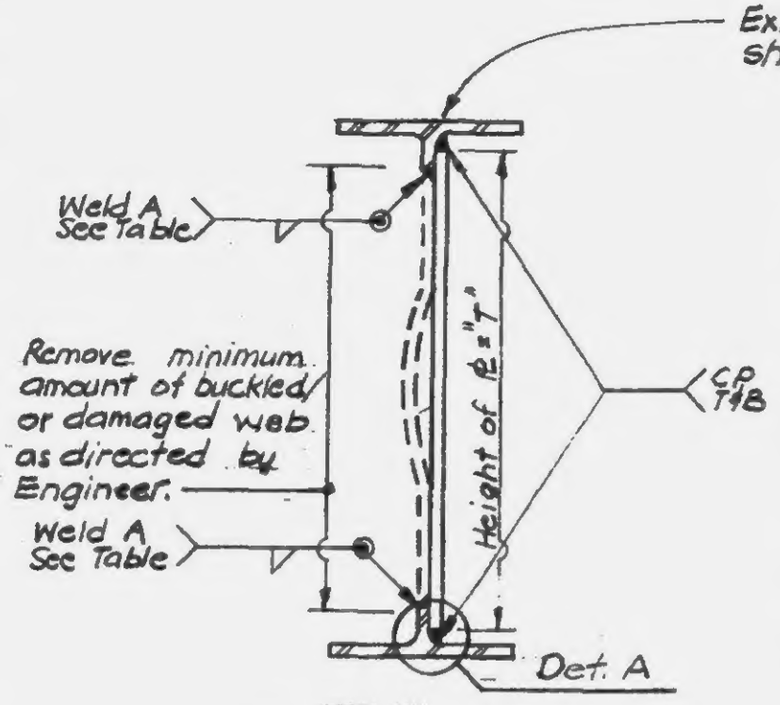

Section A-A

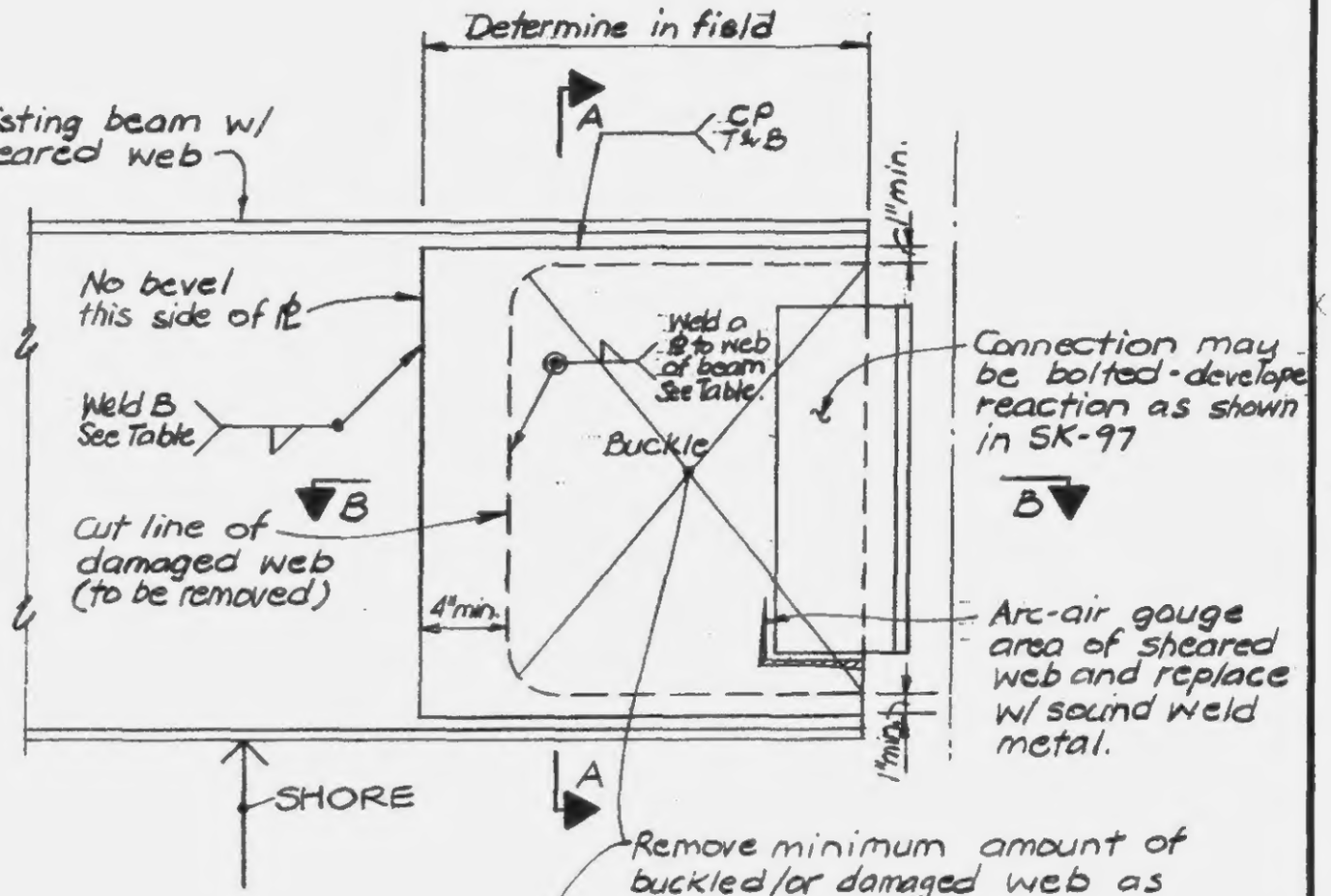

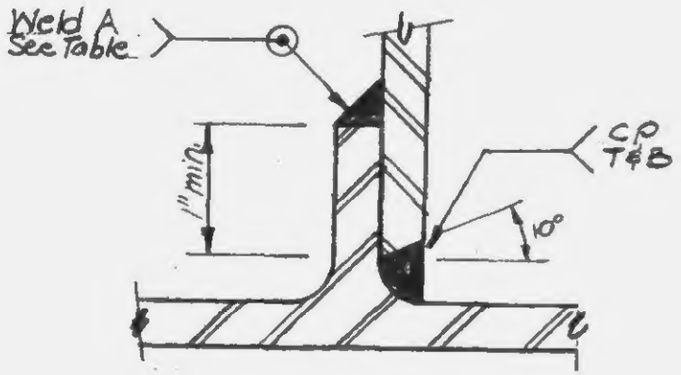

Detail A

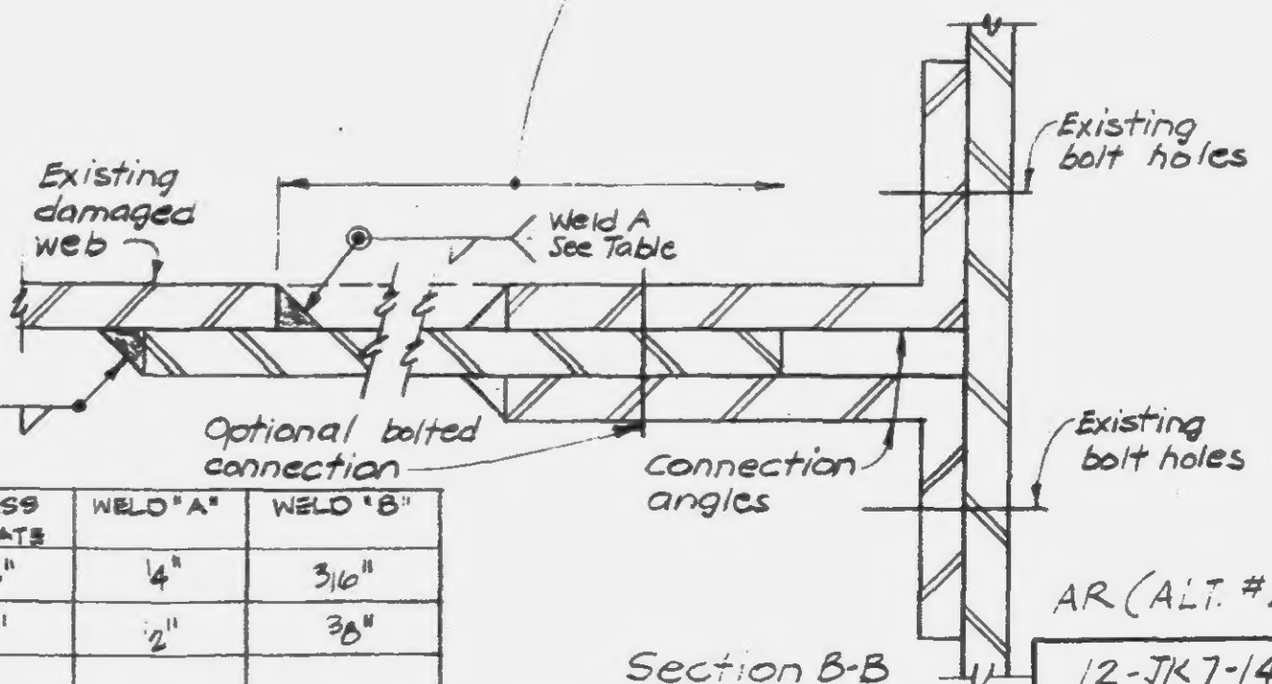

Section B-B

SIZE OF EXISTING BEAM	WEB THICKNESS	HEIGHT ("T")	THICKNESS NEW PLATE	WELD "A"	WELD "B"
16WF26	1/4"	15 3/4"	5/16"	1/4"	3/16"
24WF76	7/16"	21"	1/2"	1/2"	3/8"

AR (ALT. #2)

12-JK 7-14

LICENSED PROFESSIONAL ENGINEER — LESLIE E. ROBERTSON — No. 34360 — UNIVERSITY OF THE STATE OF NEW YORK

DESIGNED

DRAWN

REVIEWED

SKILLING, HELLE, CHRISTIANSEN, ROBERTSON — Structural & Civil Engineers

PROJECT: THE WORLD TRADE CENTER | TITLE: REPAIR AT EL. 310' | DATE: 5-24-82

REVISIONS

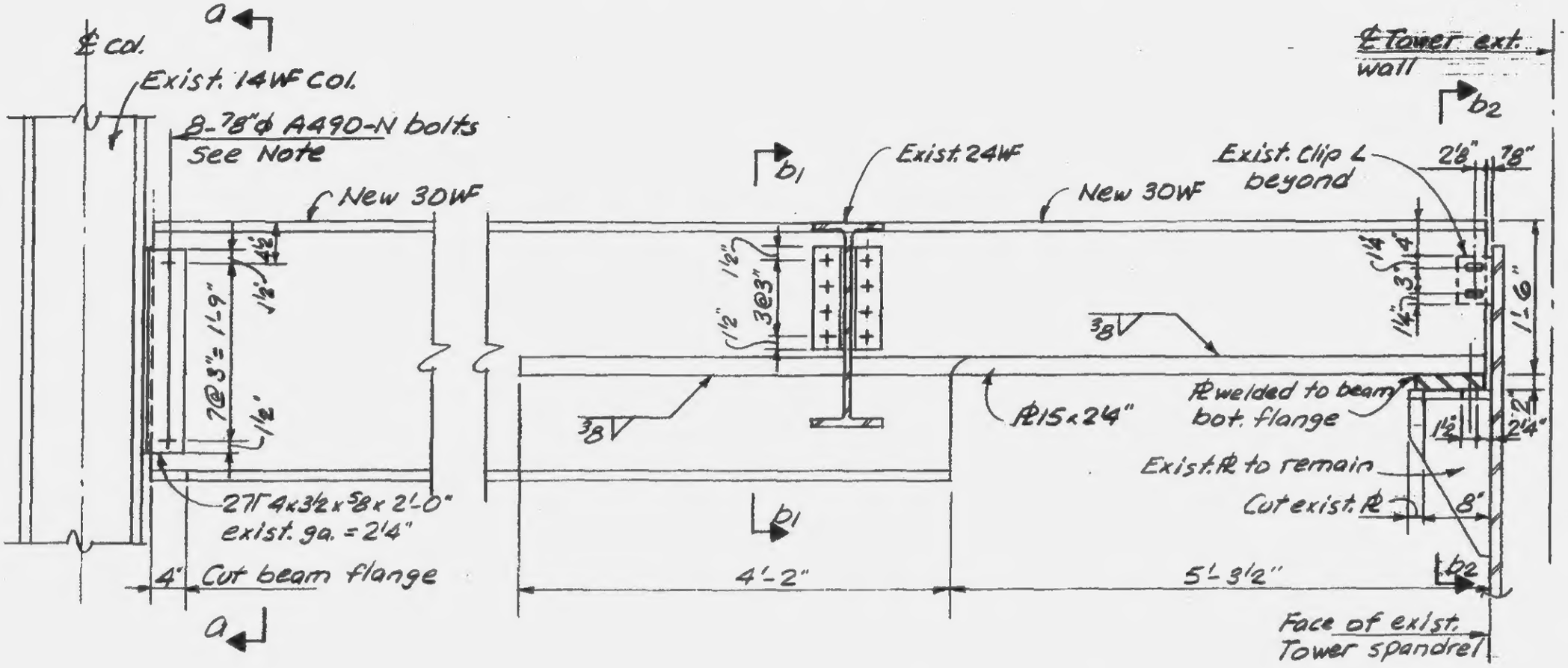

Detail A

Note: Remove ⅞"ϕ exist. bolts & install new ⅞"ϕ A490-N bolts with new beam.

Detail B

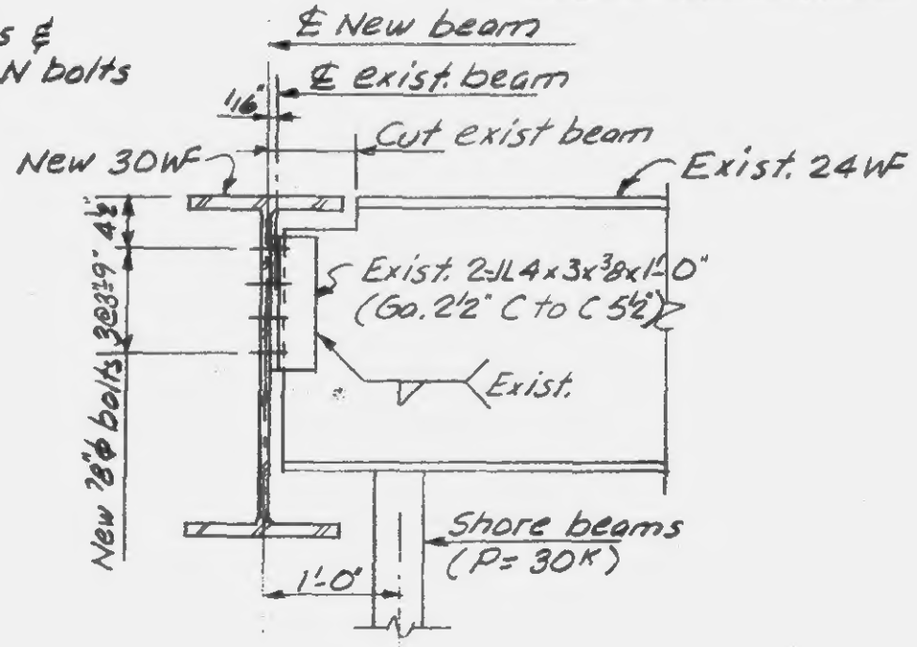

Detail C

LICENSED PROFESSIONAL ENGINEER — LESLIE E. ROBERTSON — No. 34360 — UNIVERSITY OF THE STATE OF NEW YORK

DESIGNED M. Ramani

DRAWN A.L. Franqui

REVIEWED

12-JK7-20.1

SKILLING, HELLE, CHRISTIANSEN, ROBERTSON — Structural & Civil Engineers

PROJECT: THE WORLD TRADE CENTER | TITLE: REPAIR AT EL. 310' | DATE: 5-26-72

REVISIONS

10-1-73

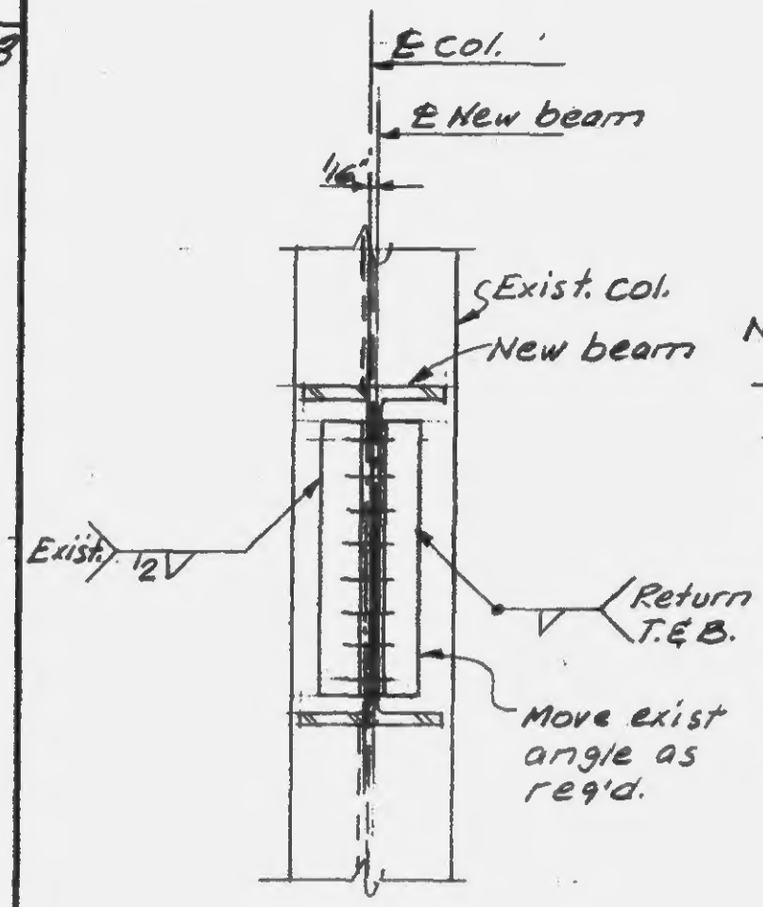

Section a-a

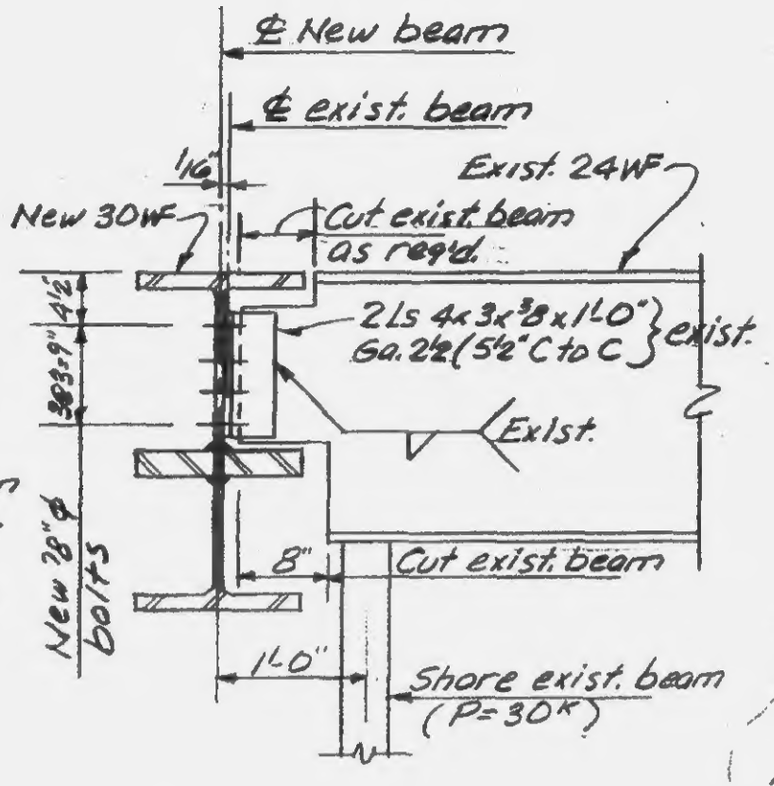

Section b1-b1

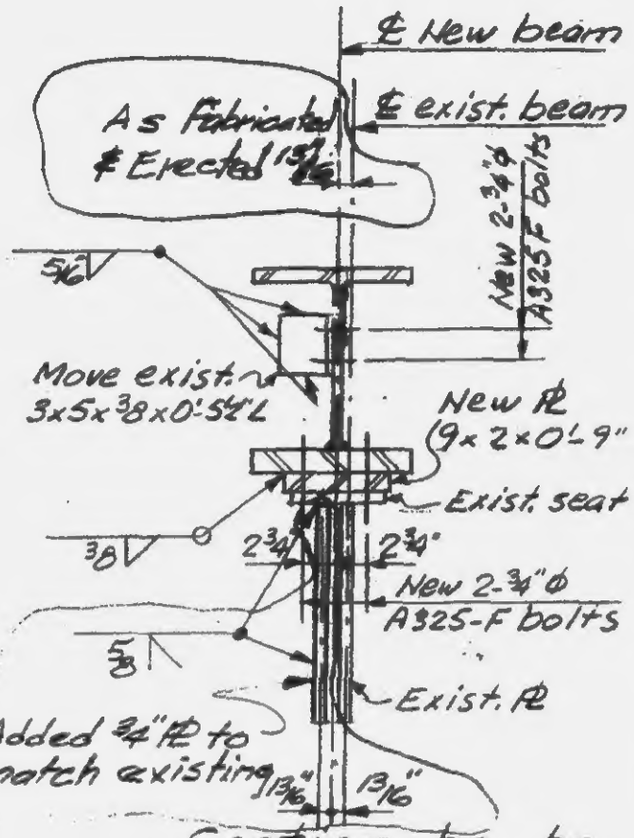

Section b2-b2

LICENSED PROFESSIONAL ENGINEER — LESLIE E. ROBERTSON — No. 34360 — UNIVERSITY OF THE STATE OF NEW YORK

DESIGNED M. Romani

DRAWN A.L. Franqui

REVIEWED

12-JK7-20.2

SKILLING, HELLE, CHRISTIANSEN, ROBERTSON — Structural & Civil Engineers

PROJECT: THE WORLD TRADE CENTER | TITLE: REPAIR AT EL. 310' | DATE: 5-26-72

REVISIONS

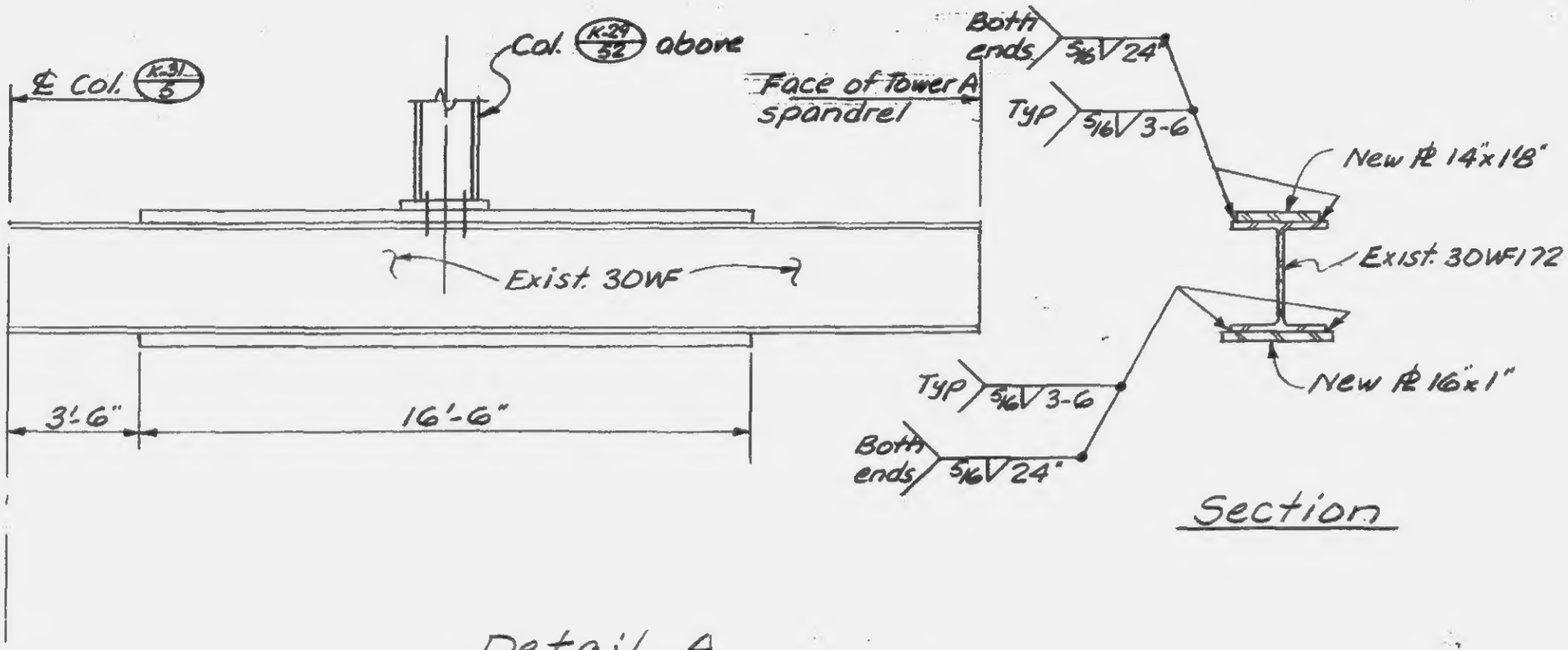

Detail A

Section

LICENSED PROFESSIONAL ENGINEER — LESLIE E. ROBERTSON — No. 34360 — UNIVERSITY OF THE STATE OF NEW YORK

DESIGNED M. Ramani

DRAWN A.L. Franqui

REVIEWED

12-JK7-21